58'-4"
31'-8"
7'-6"
KITCHEN STORE
09'-06"X06'-0"
D-6
V-2
CHAJJA
9'-6"
W-3
CHAJJA
4'-4"
UP
23
C.B
BED-ROOM
15'-08"X13'-0"
D-5
LOBBY
19'-08"X26'-07"
D-10
D-8
LOUNDRY
10'-10"X05'-0"
V-2
W.M
19'-8"
D-3
3'
D-9
38'-7"
CHAJJA
41'-7"
C.B
D-2
D-7
DRW-ROOM
16'-0"X14'-06"
FOYER WIDE -7'-8"
C.WASH ROOM
06'-11"X09'-09"
BED-ROOM
14'-06"X15'-0"
D-1
D-4
V-1
W-1
9'-6"
W-2
6'-4"
PORCH
16'-09"X07'-07"
1'-3"
3'-6"
R5'-1"
WATER TANK
GARDEN AREA
PATH
MAIN ENTRY=12'

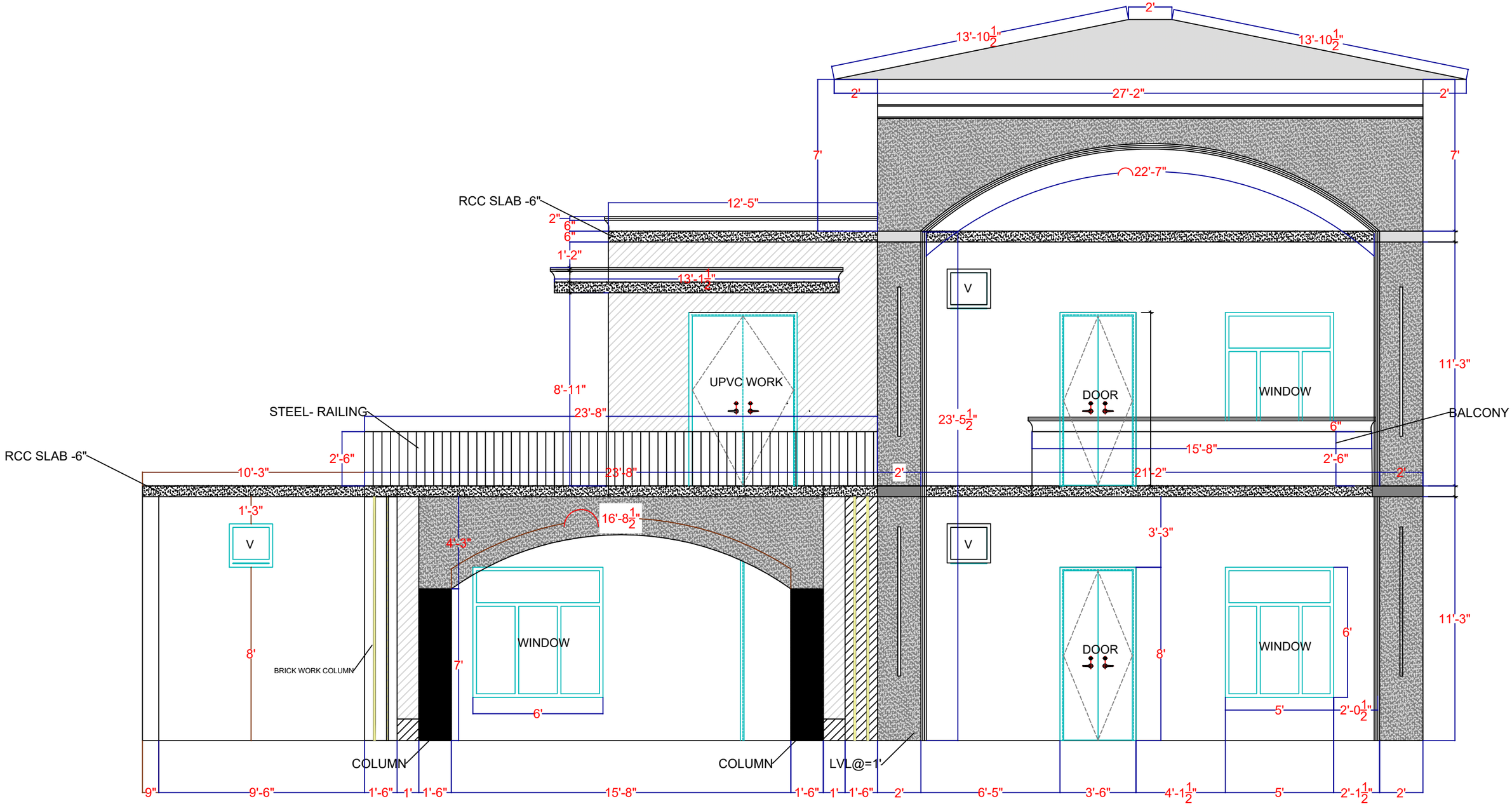
2'
13'-10 1/2"
13'-10 1/2"
2'
27'-2"
2'
7'
7'
22'-7"
RCC SLAB -6"
12'-5"
2"
6"
6"
1'-2"
13'-1 1/2"
V
UPVC WORK
8'-11"
23'-8"
STEEL- RAILING
23'-5 1/2"
DOOR
WINDOW
11'-3"
BALCONY
6"
15'-8"
2'-6"
RCC SLAB -6"
10'-3"
2'-6"
23'-8"
2'
21'-2"
2'
1'-3"
V
16'-8 1/2"
4'-3"
V
3'-3"
11'-3"
8'
BRICK WORK COLUMN
WINDOW
7'
6'
DOOR
8'
WINDOW
6'
5'
2'-0 1/2"
COLUMN
COLUMN
LVL@=1'
9"
9'-6"
1'-6"
1'
1'-6"
15'-8"
1'-6"
1'
1'-6"
2'
6'-5"
3'-6"
4'-1 1/2"
5'
2'-1 1/2"
2'

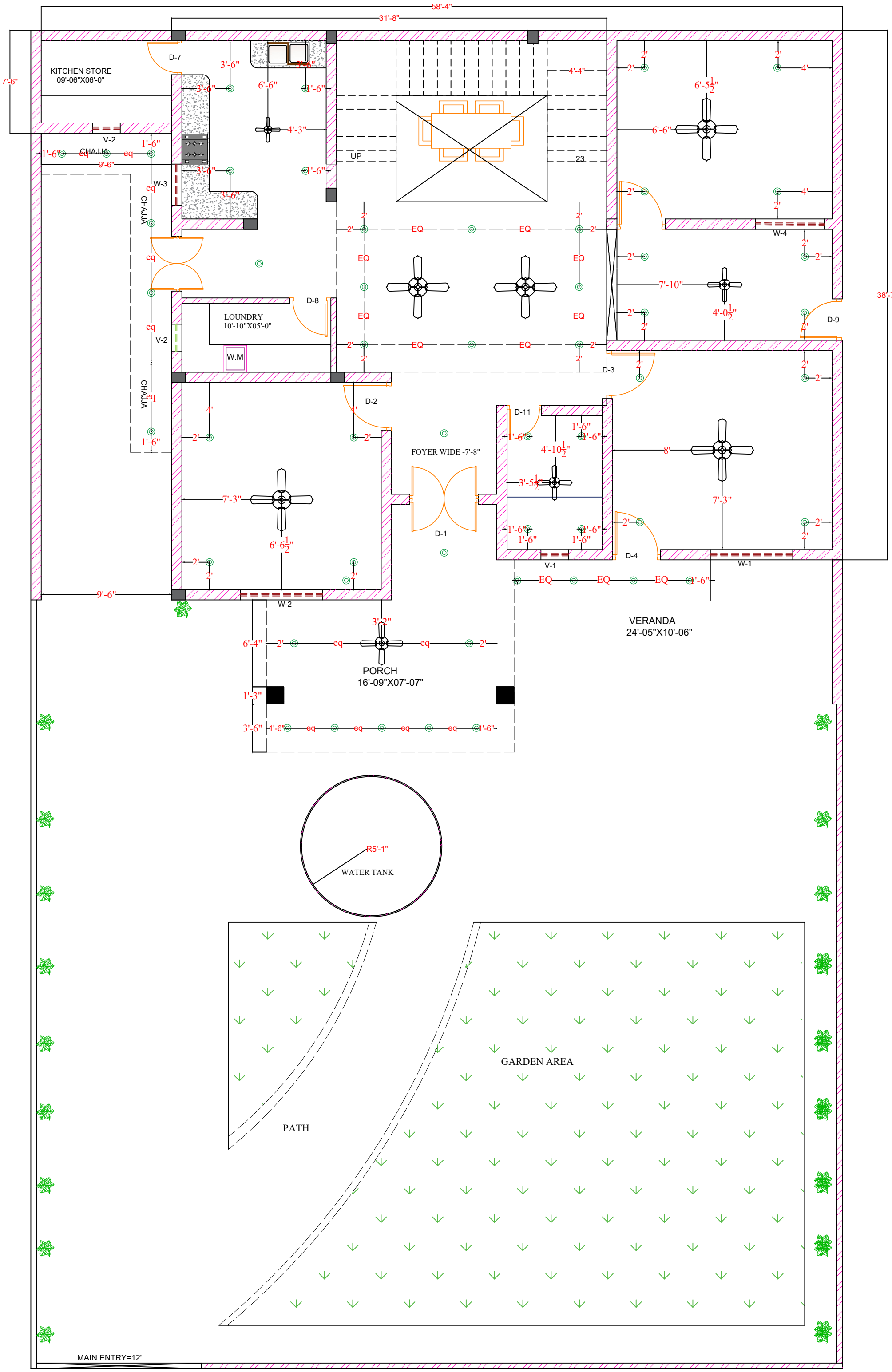
58'-4"
31'-8"
38'-7"
7'-6"
KITCHEN STORE
09'-06"X06'-0"
D-7
V-2
CHAJJA
W-3
D-8
LOUNDRY
10'-10"X05'-0"
W.M
D-2
FOYER WIDE -7'-8"
D-1
D-11
D-3
D-4
V-1
W-1
W-2
W-4
D-9
UP
23
EQ
VERANDA
24'-05"X10'-06"
PORCH
16'-09"X07'-07"
R5'-1"
WATER TANK
PATH
GARDEN AREA
MAIN ENTRY=12'

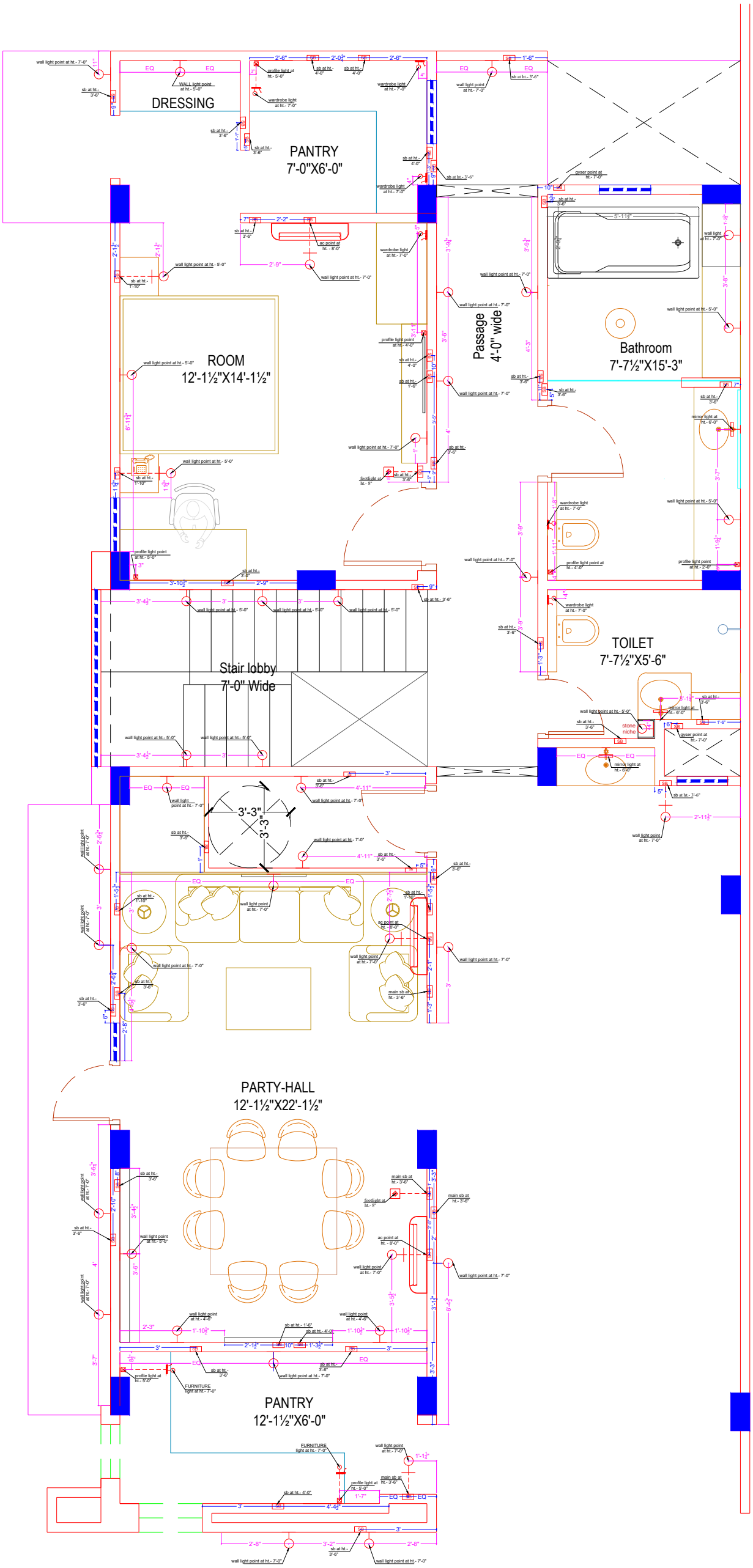

LEGEND			
NAME	SYMBOL	NAME	SYMBOL
WALL LIGHT		FURNITURE LIGHT	
SWITCH BOARD	SB	HANGING LIGHT	
PLUG POINT(6amp)		FOOT LIGHT	
POWER POINT(16amp)		DISTRIBUTION BOARD	
ONE WAY SWITCH		GEYSER	G
2 WAY SWITCH		AUTOMATION	A
LAN		MIRROR LIGHT	
CCTV POINT		BELL	
AC		SPEAKER	
WALL EXHAUST FAN		CEILING FAN	
CEILING EXHAUST FAN		CHANDELIER	
CEILING LIGHT		COVE LIGHT	
TRACK LIGHT		WARDROBE LIGHT	
WALL FAN		INVERTER	INV
VIDEO SCREEN		FAN REGULATER	
ONE WAY CONNECTION		TWO WAY CONNECTION	
INTERCOM		REVISION	R1

BASIC ELECTRICAL LAYOUT(SECOND FLOOR)

PROJECT TITLE:
MR. PANKAJ AND POORVA

DRAWING TITLE:
BASIC ELECTRUC LAYOUT
(SECOND FLOOR)

DATE :
19-12-2024

SCALE :
1 = 1

DESIGNED BY
ID.SHREYANSH TAILOR

NORTH

NOTES :

1. All dimensions are in feet and inches.
2. All dimensions shall be verified on site & if any changes are made then it shall be immediately brought to the notice of the architects before commencement of the work.

PRINCIPAL ARCHITECT :
Kavya Trehan

C-77,B-F, Shyam Apartment,
Sarojini Marg, C - Scheme,
Jaipur, 302001
Contact : 9950244465

STAVYA design studio

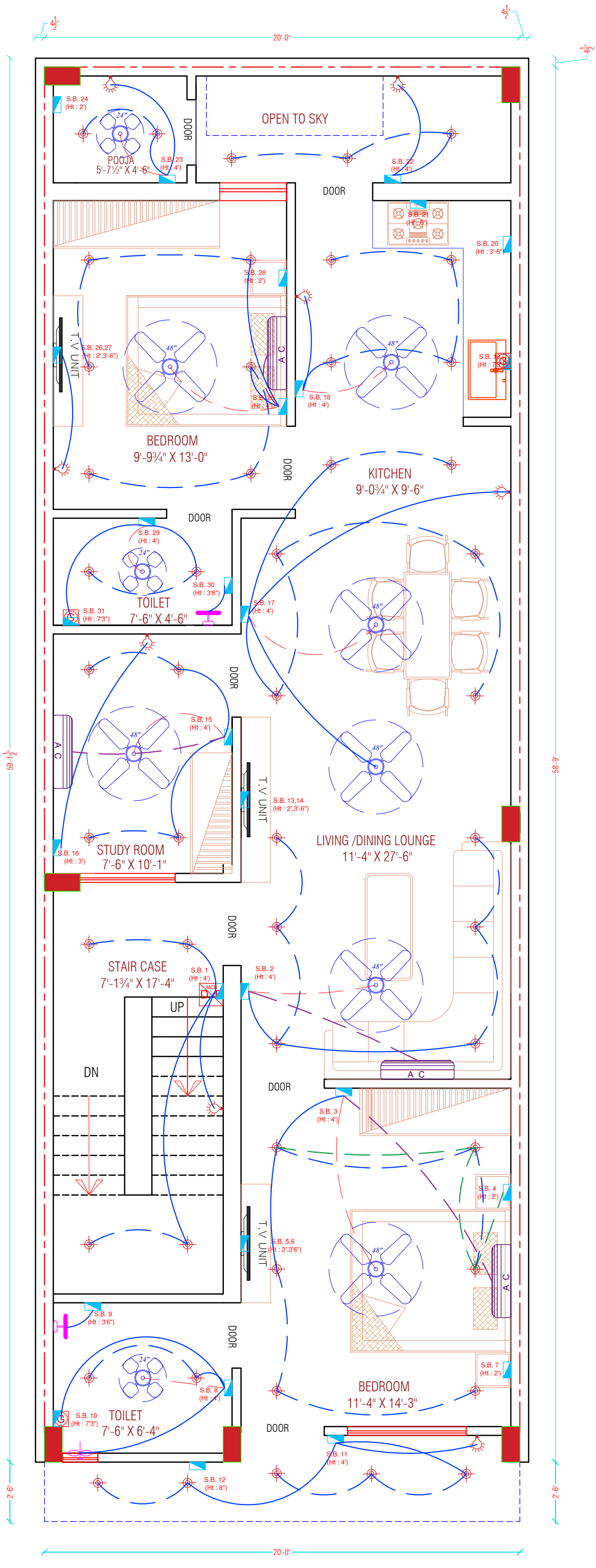
20'-0"
OPEN TO SKY
POOJA
5'-7½" X 4'-6"
S.B. 24
(Ht : 2')
S.B. 23
(Ht : 4')
S.B. 22
(Ht : 4')
S.B. 21
(Ht : 6')
S.B. 20
(Ht : 3'-6")
DOOR
S.B. 28
(Ht : 2')
T.V UNIT
S.B. 26,27
(Ht : 2',3'-6")
A C
S.B. 18
(Ht : 4')
BEDROOM
9'-9¾" X 13'-0"
KITCHEN
9'-0¾" X 9'-6"
S.B. 29
(Ht : 4')
S.B. 30
(Ht : 3'6")
S.B. 31
(Ht : 7'3")
TOILET
7'-6" X 4'-6"
S.B. 17
(Ht : 4')
S.B. 15
(Ht : 4')
S.B. 13,14
(Ht : 2',3'-6")
S.B. 16
(Ht : 3')
STUDY ROOM
7'-6" X 10'-1"
LIVING /DINING LOUNGE
11'-4" X 27'-6"
STAIR CASE
7'-1¾" X 17'-4"
S.B. 1
(Ht : 4')
S.B. 2
(Ht : 4')
UP
DN
S.B. 3
(Ht : 4')
S.B. 4
(Ht : 2')
S.B. 5,6
(Ht : 2',3'6")
S.B. 7
(Ht : 2')
S.B. 9
(Ht : 3'6")
S.B. 8
(Ht : 4')
S.B. 10
(Ht : 7'3")
TOILET
7'-6" X 6'-4"
BEDROOM
11'-4" X 14'-3"
S.B. 11
(Ht : 4')
S.B. 12
(Ht : 8")
48"
24"
59'-1½"
58'-9"
2'-6"
20'-0"



PROJECT TITLE:
MR PANKAJ &MRS SARIKA

DRAWING TITLE:
FLOORING TILE LAYOUT

DATE :
23-01-2024

SCALE :
1 = 1

DRAFTED BY
SHREYANSH TAILOR

CHECKED BY
BHUPENDRA RATHI

NOTES :

1. All dimensions are in feet and inches.
2. All dimensions shall be verified on site & if any changes are made then it shall be immediately brought to the notice of the architects before commencement of the work.

PRINCIPAL ARCHITECT :
Kavya Trehan

C-77,B-F, Shyam Apartment,
Sarojini Marg, C - Scheme,
Jaipur, 302001
Contact : 9950244465

STAVYA design studio

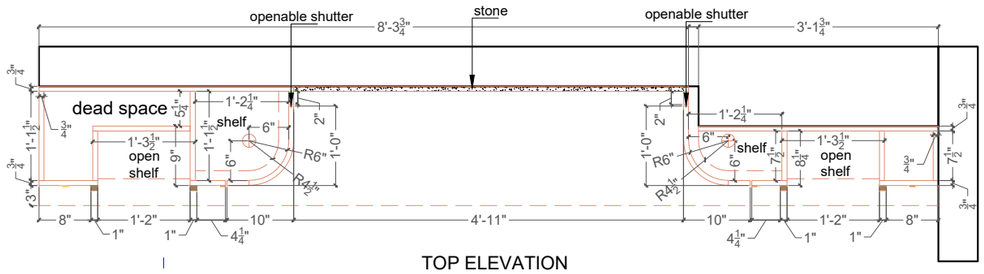

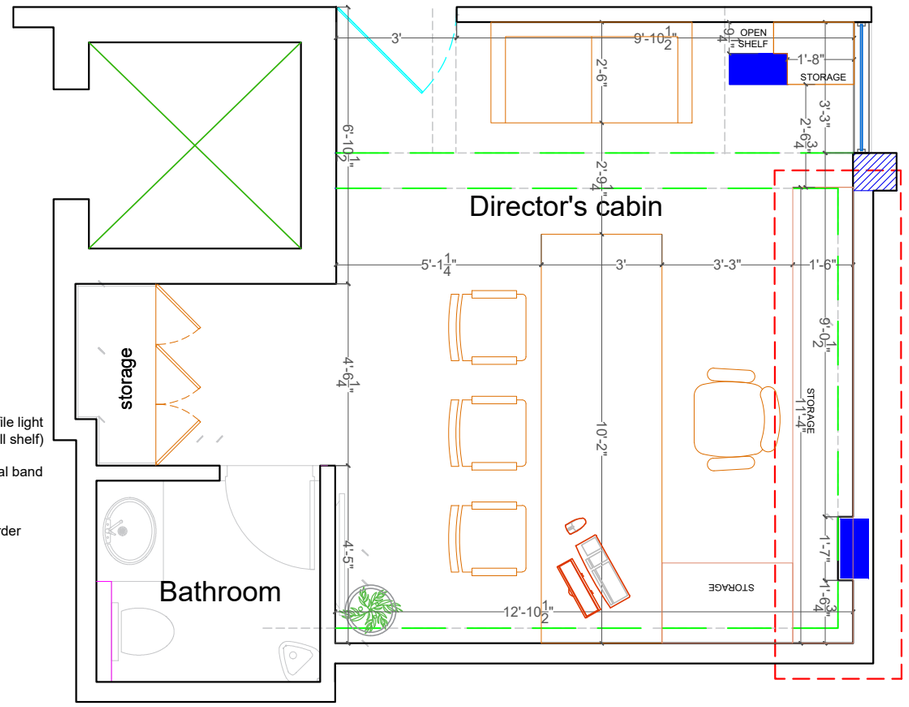

KEY PLAN

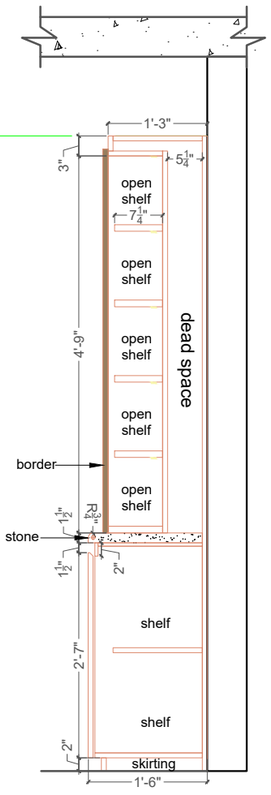

SECTION SIDE ELEVATION A-A

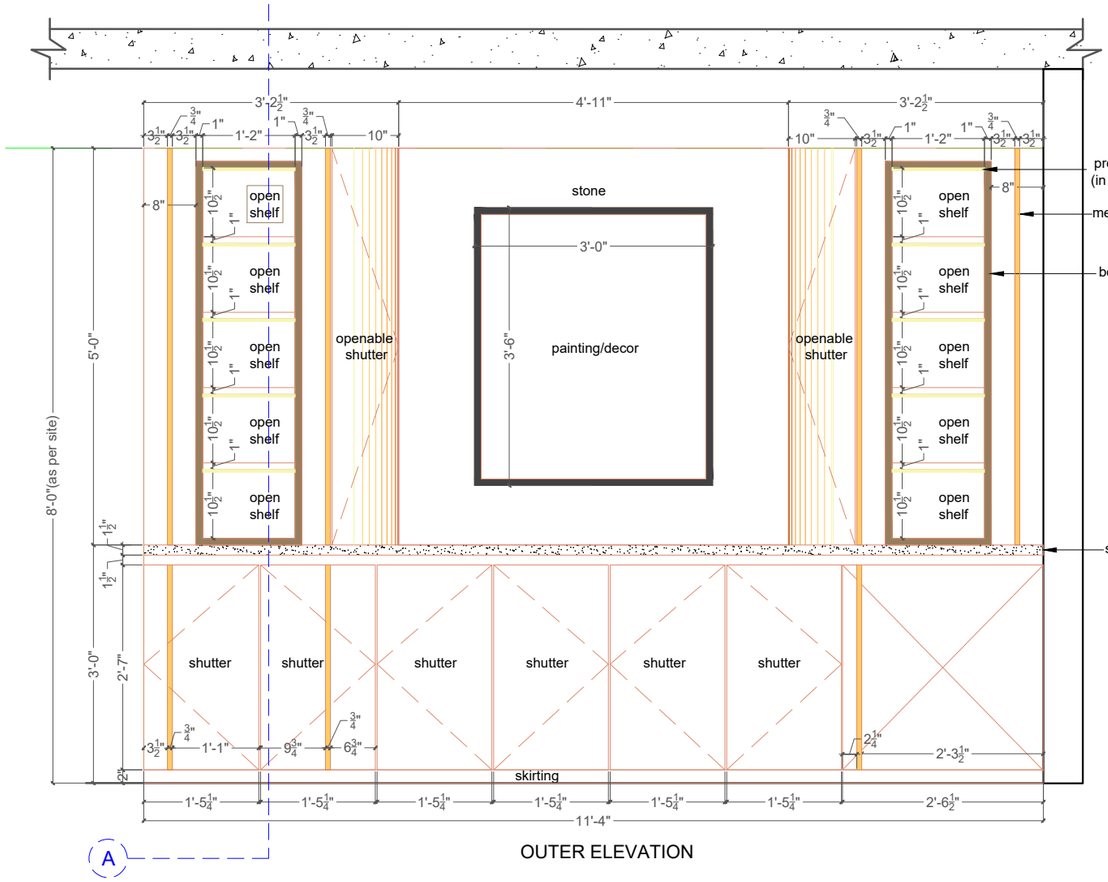

OUTER ELEVATION

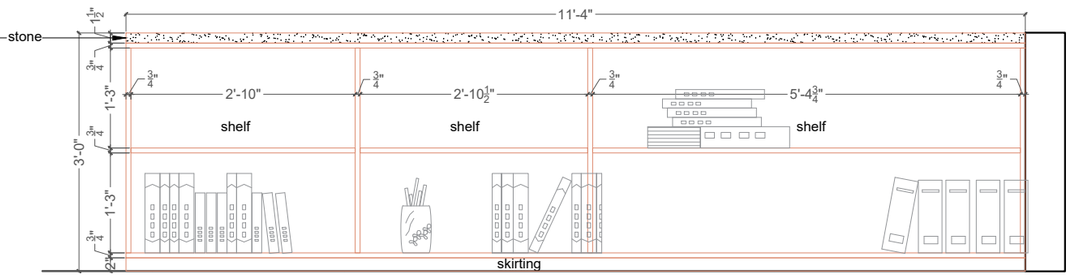

INNER ELEVATION

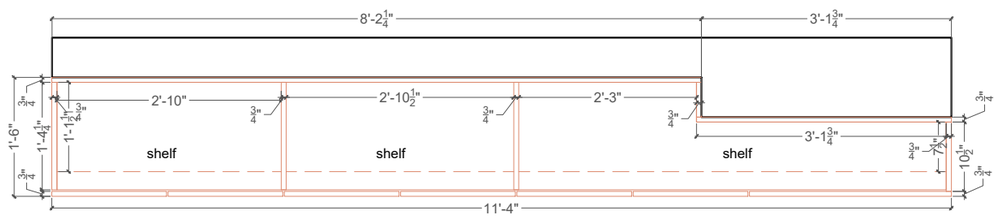

SECTIONAL TOP PLAN

PROJECT TITLE:
CHETAN AND NARESH

DRAWING TITLE:
BACK WALL UNIT OF CHETAN'S CABIN

DATE :
20-01-2025

SCALE :
1 = 1

DESIGNED BY
ID.SHREYANSH

NORTH

NOTES :

1. All dimensions are in feet and inches.
2. All dimensions shall be verified on site & if any changes are made then it shall be immediately brought to the notice of the architects before commencement of the work.

PRINCIPAL ARCHITECT :
Kavya Trehan

C-77,B-F, Shyam Apartment,
Sarojini Marg, C - Scheme,
Jaipur, 302001
Contact : 9950244465

STAVYA design studio

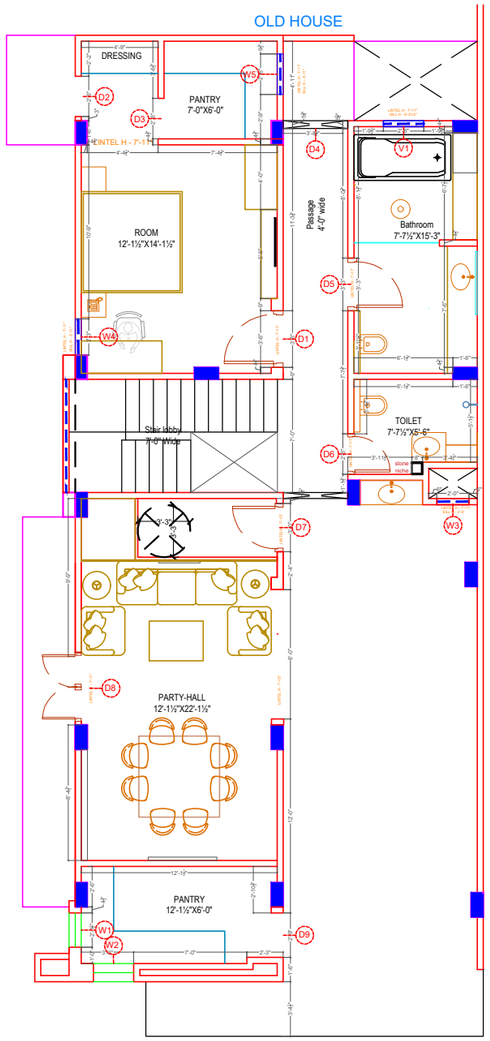

DOOR SCHEDULE

SR NO.	LINTEL	TYPOLOGY	WALL THICKNESS	
D1	@7'-11"	SINGLE DOOR	@10"	
D2	@7'-11"	SINGLE DOOR	@6"	
D3	@7'-11"	SINGLE DOOR	@6"	
D4	@7'-11"	DOUBLE DOOR	@6"	
D5	@7'-11"	SINGLE DOOR	@6"	
D6	@7'-11"	SINGLE DOOR	@6"	
D7	@7'-10"	SINGLE DOOR	@6"	
D8	@7'-11"	DOUBLE DOOR	@6"	
D9	@7'-11"	SINGLE DOOR	@10"	

WINDOW SCHEDULE

SR NO.	LINTEL	SILL	TYPOLOGY	WALL THICKNESS	CHOWKHAT THICKNESS
W1	@7'-11"	@4'-0"	FIXED WINDOW	@1'-1½"	
W2	@7'-11"	@4'-0"	FIXED WINDOW	@1'-1½"	
W3	@7'-11"	@2'-0"	OPENABLE WINDOW	@6"	
W4	@7'-11"	@2'-11"	OPENABLE WINDOW	@6"	
W5	@7'-11"	@3'-11"	OPENABLE WINDOW	@6"	

VENTILATOR SCHEDULE

SR NO.	LINTEL	SILL	TYPOLOGY	WALL THICKNESS
V1	@7'-11"	@6'-2½"	FIXED WINDOW	@6"

DOOR SCHEDULE
WINDOW SCHEDULE
VENTILATOR SCHEDULE

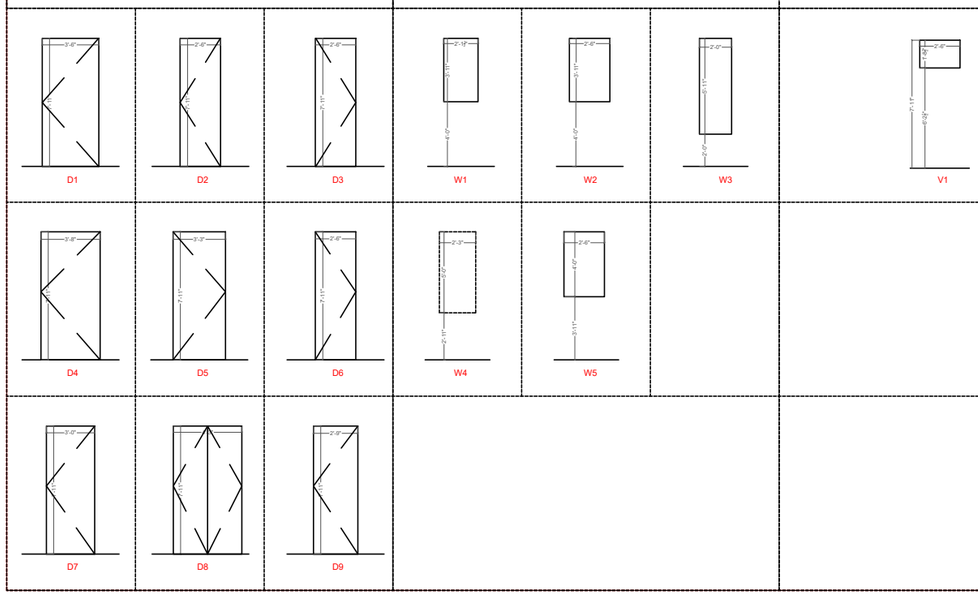

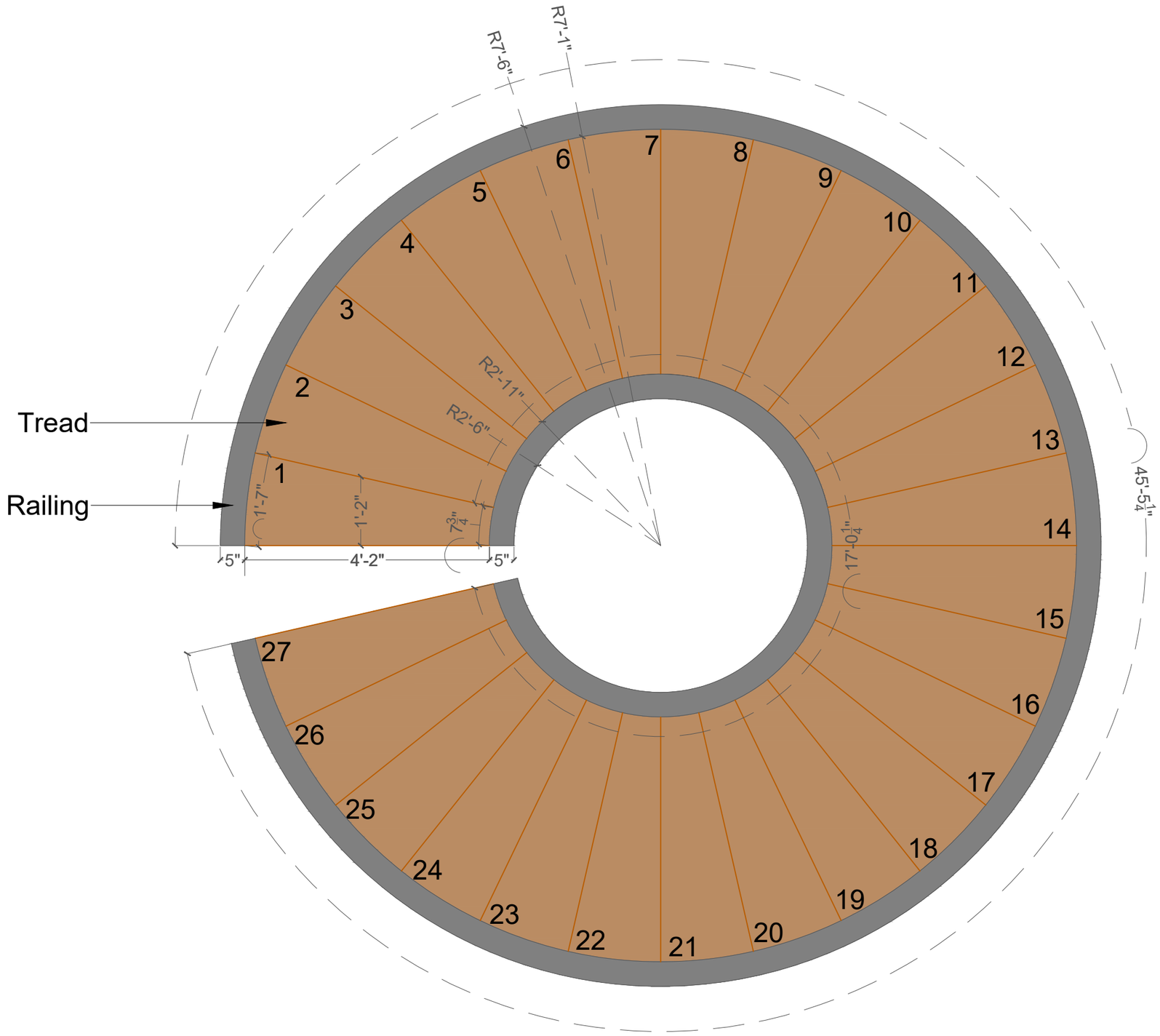

TOP SECTIONAL PLAN

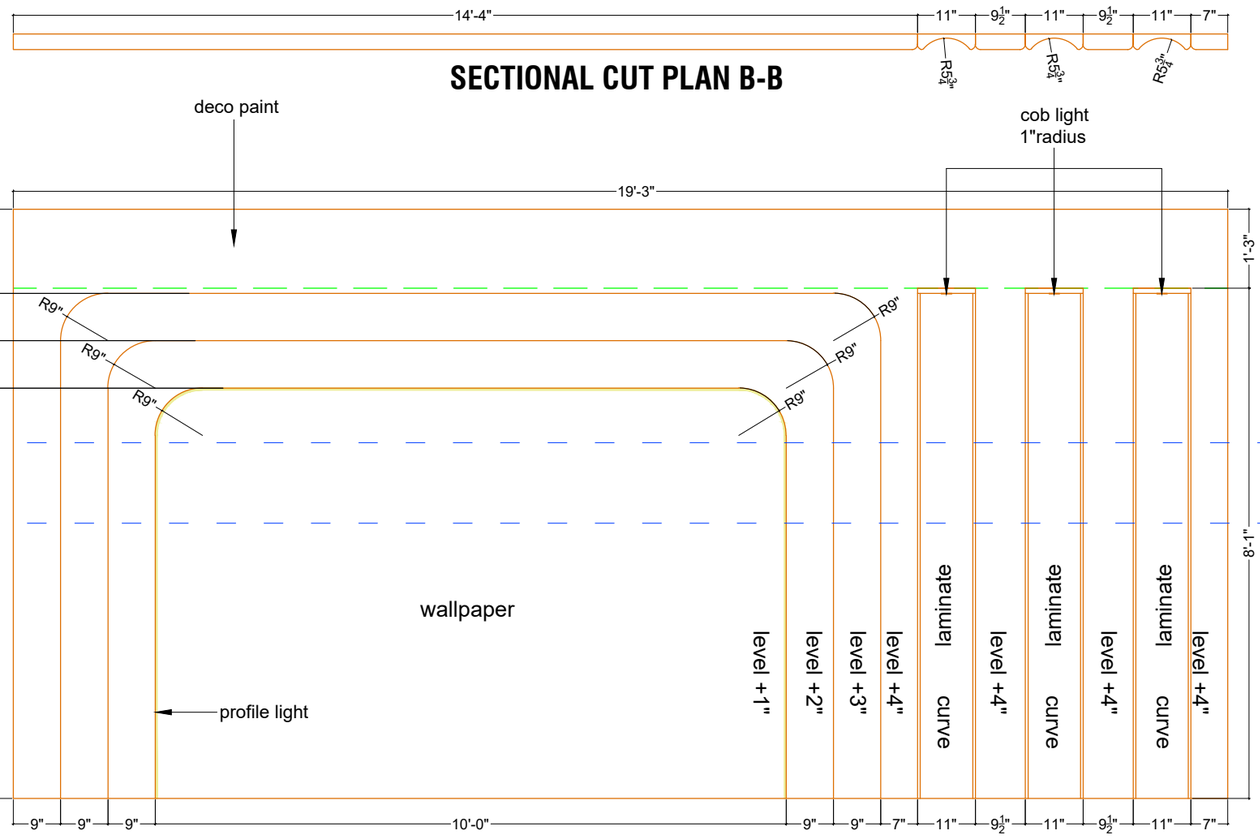

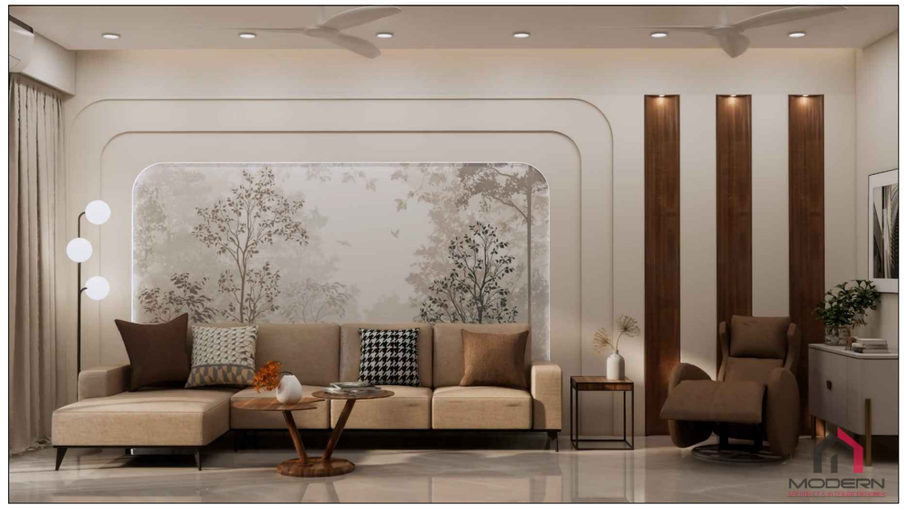

REFRENCE IMAGE

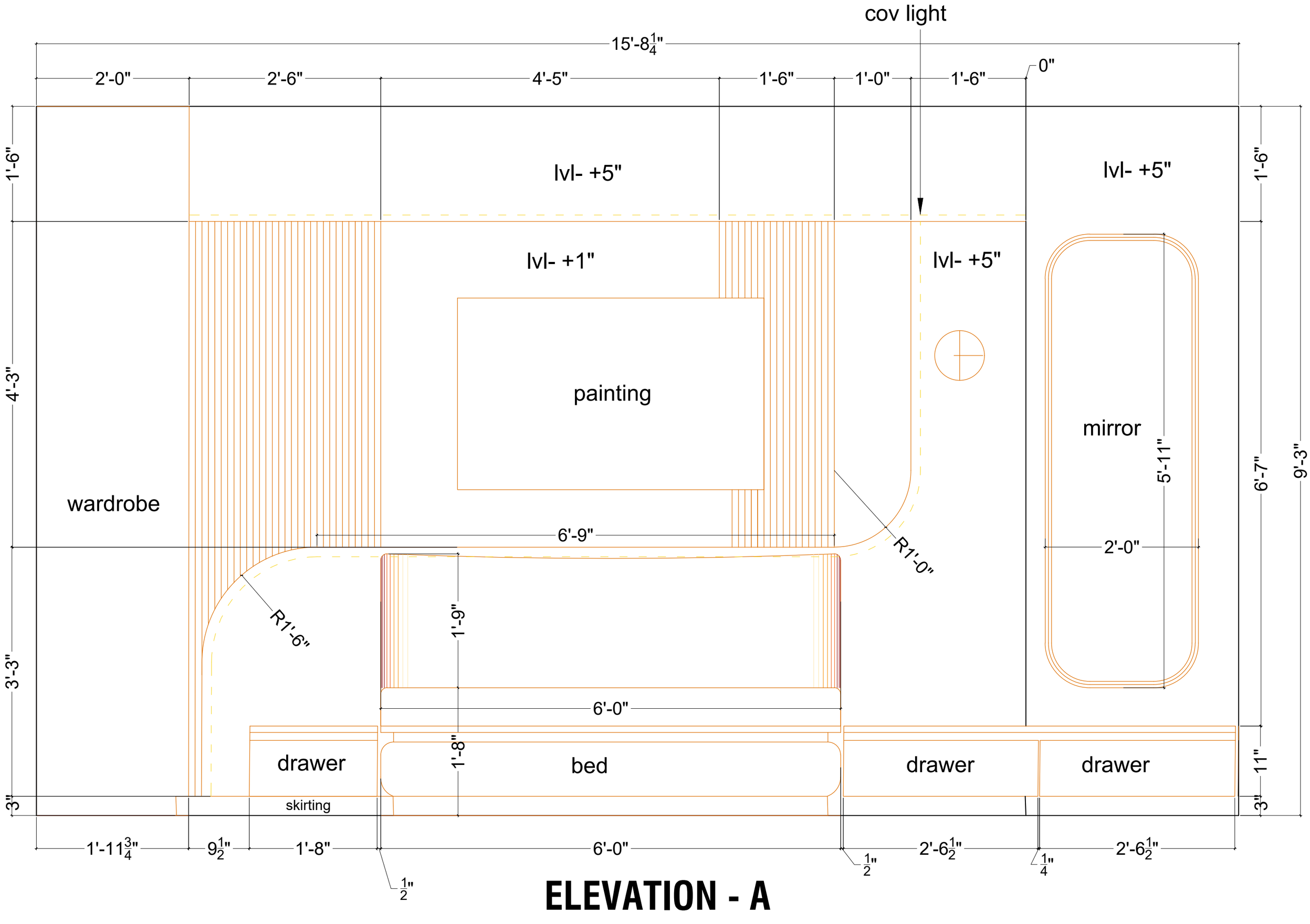
cov light
15'-8 1/4"
2'-0"
2'-6"
4'-5"
1'-6"
1'-0"
1'-6"
0"
1'-6"
lvl- +5"
lvl- +5"
lvl- +1"
lvl- +5"
painting
mirror
5'-11"
wardrobe
6'-9"
R1'-0"
R1'-6"
1'-9"
2'-0"
6'-7"
9'-3"
4'-3"
3'-3"
6'-0"
1'-8"
drawer
bed
drawer
drawer
11"
3"
skirting
3"
1'-11 3/4"
9 1/2"
1'-8"
6'-0"
2'-6 1/2"
2'-6 1/2"
1/2"
1/4"
1/2"

ELEVATION - A

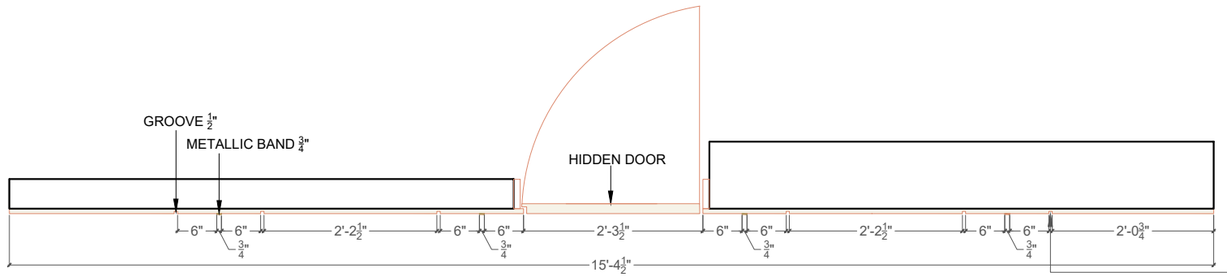

TOP SECTIONAL PLAN

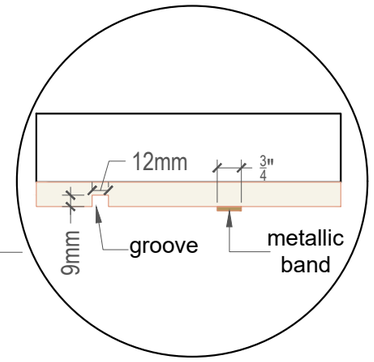

DETAIL A

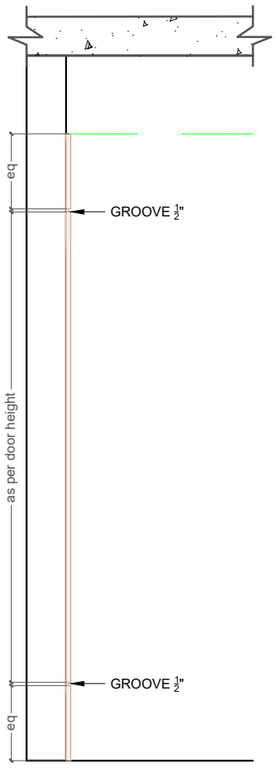

SIDE ELEVATION

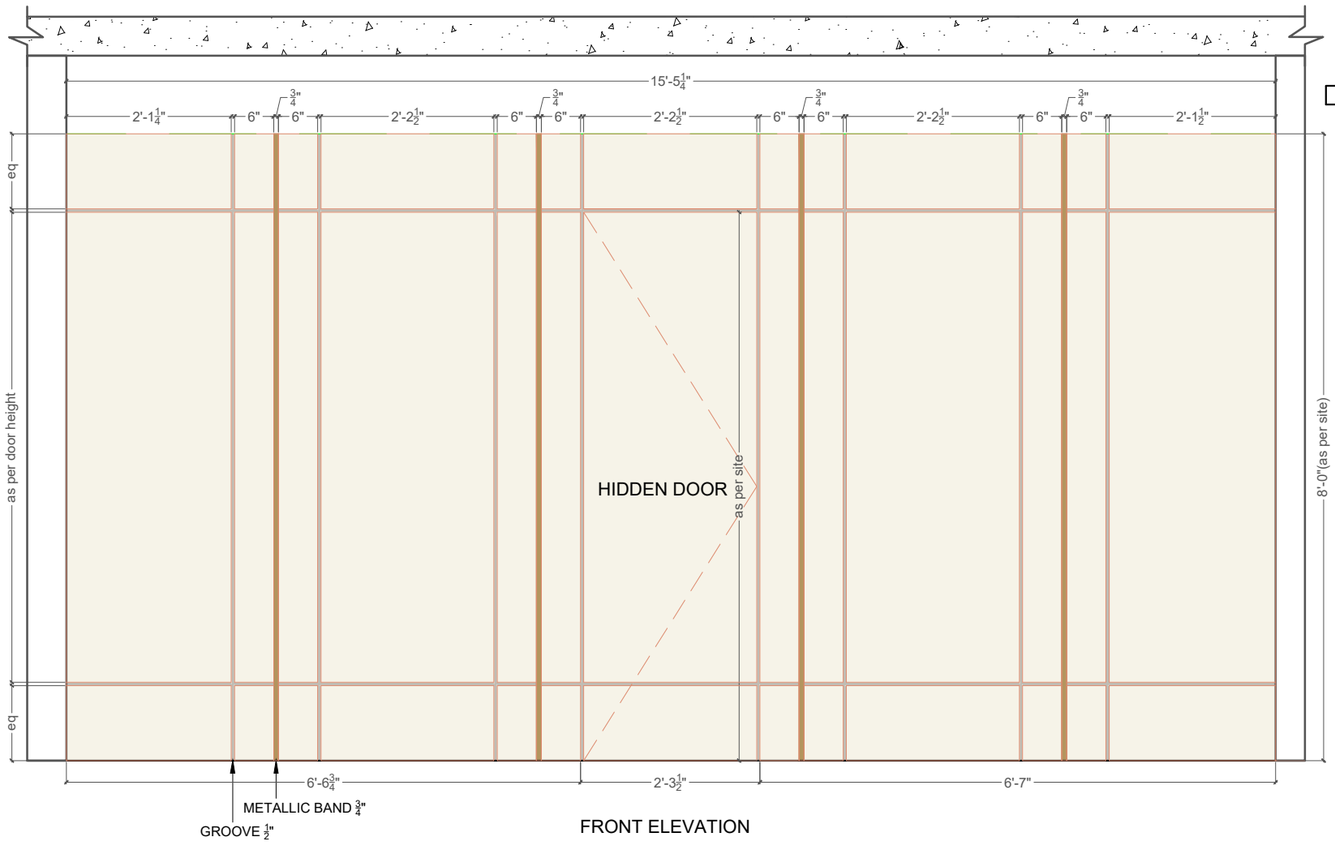

FRONT ELEVATION

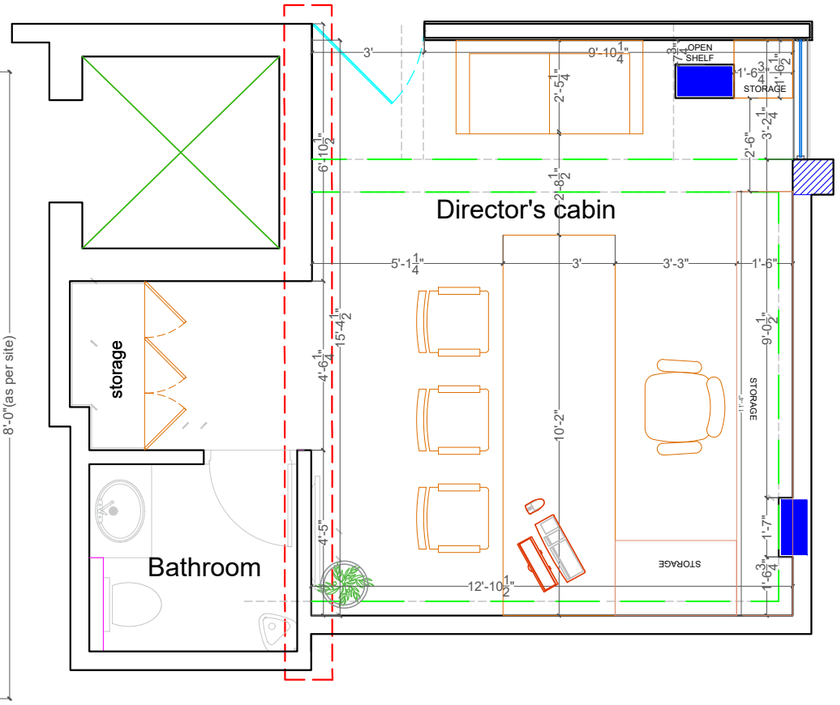

KEY PLAN

HIDDEN PANEL OF DIRECTOR CABIN

PROJECT TITLE:
CHETAN AND NARESH

DRAWING TITLE:
HIDDEN PANEL OF CHETAN'S CABIN

DATE :
20-01-2025

SCALE :
1 = 1

DESIGNED BY
ID.SHREYANSH

NORTH

NOTES :

1. All dimensions are in feet and inches.
2. All dimensions shall be verified on site & if any changes are made then it shall be immediately brought to the notice of the architects before commencement of the work.

PRINCIPAL ARCHITECT :
Kavya Trehan

C-77,B-F, Shyam Apartment,
Sarojini Marg, C - Scheme,
Jaipur, 302001
Contact : 9950244465

STAVYA design studio

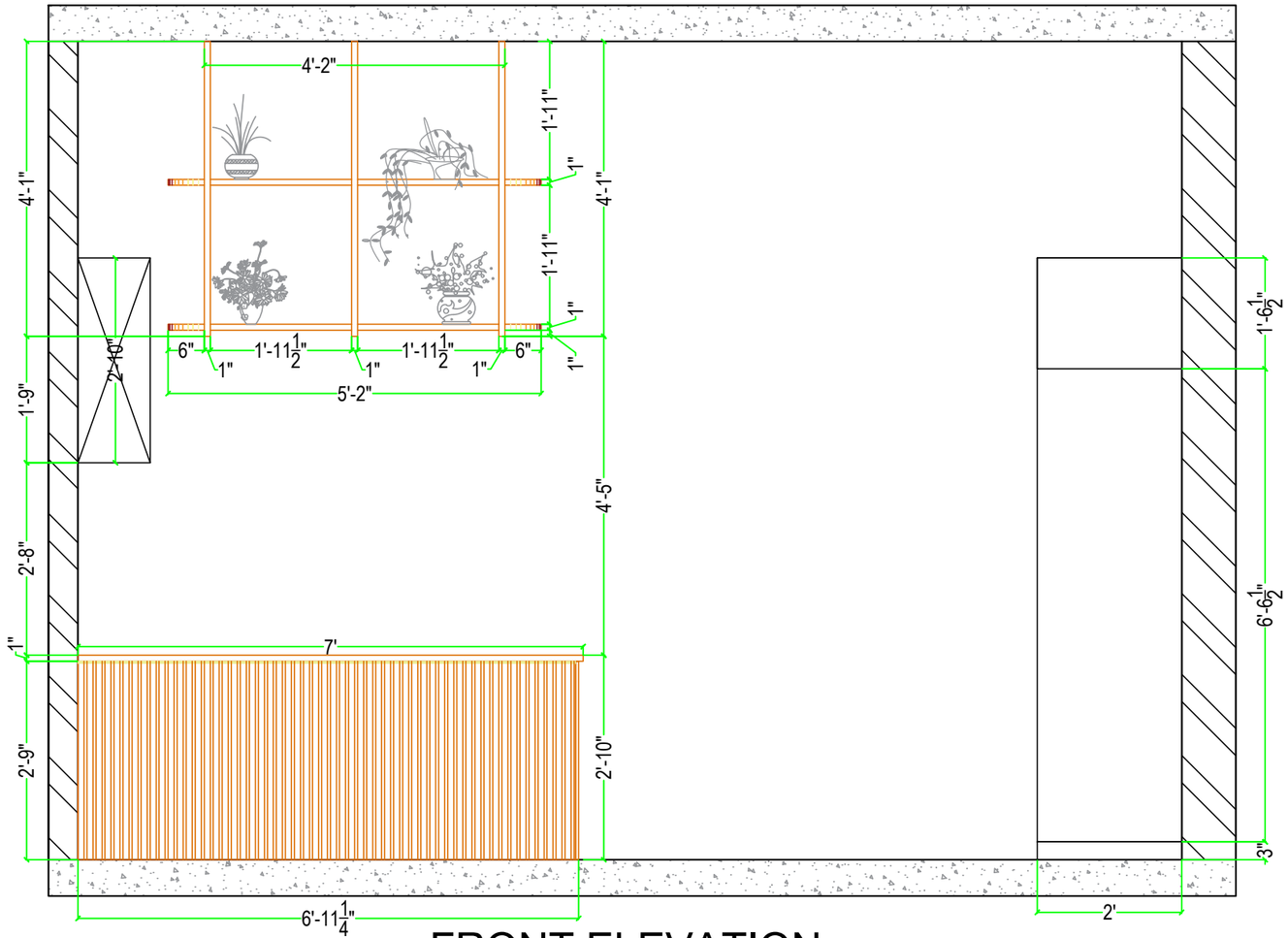

FRONT ELEVATION

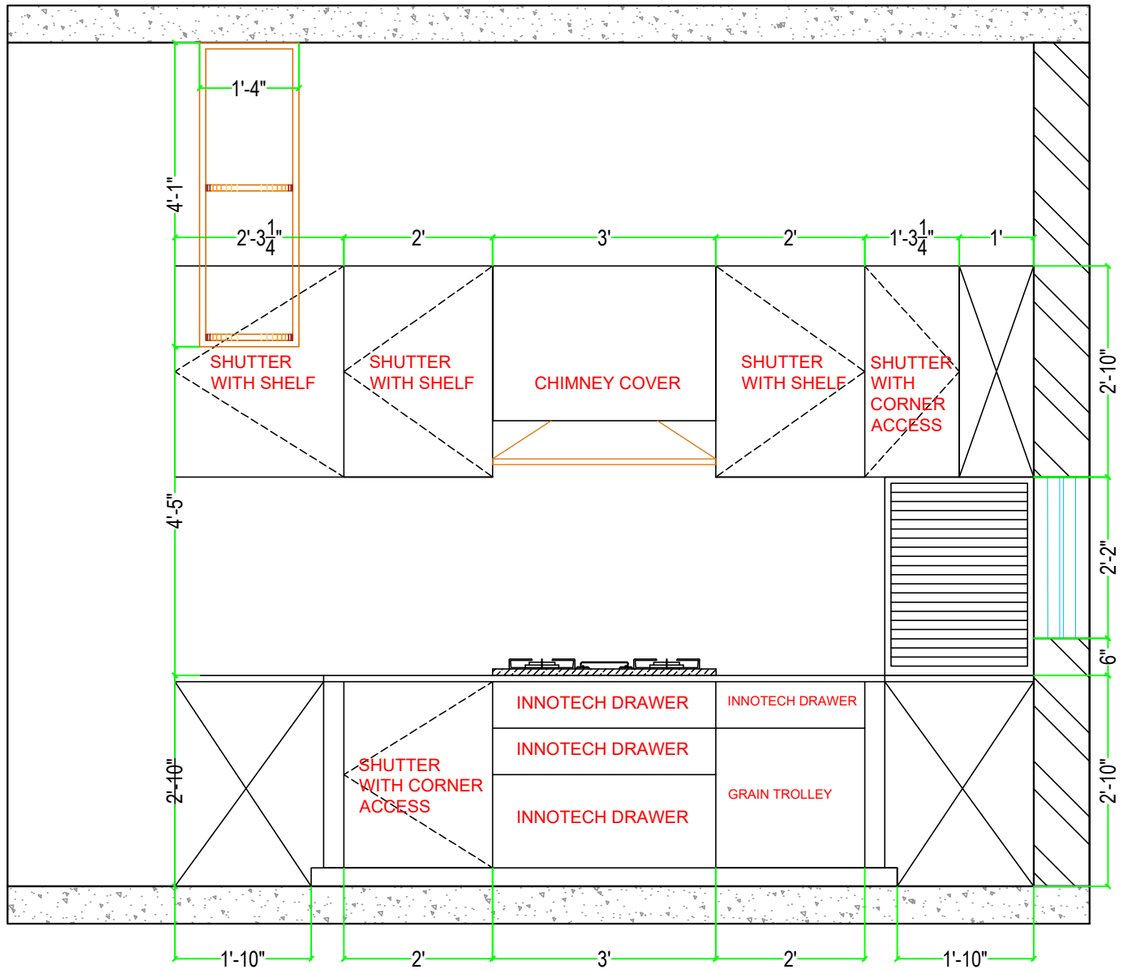

SIDE ELEVATION

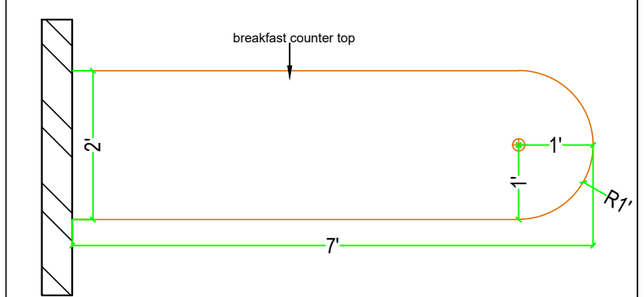

SECTION TOP PLAN
OF BREAKFAST TABLE

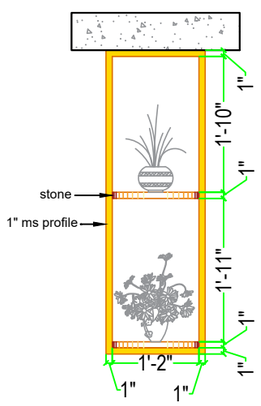

SIDE ELEVATION
OF HANGING SHELF

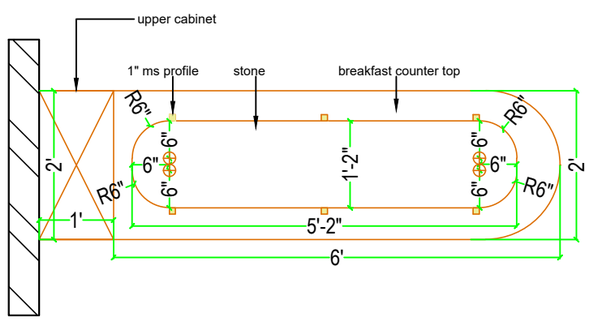

SECTION TOP PLAN
OF HANGING SHELF

PROJECT TITLE:
NEHA AND AMIT

DRAWING TITLE:
BREAKFAST & HANGING
SHELF DETAIL

DATE :
30-01-2025

SCALE :
1 = 1

DRAFTED BY
SHREYANSH

NORTH

NOTES :

1. All dimensions are in feet and inches.
2. All dimensions shall be verified on site & if any changes are made then it shall be immediately brought to the notice of the architects before commencement of the work.

PRINCIPAL ARCHITECT :
Kavya Trehan

C-77,B-F, Shyam Apartment,
Sarojini Marg, C - Scheme,
Jaipur, 302001
Contact : 9950244465

STAVYA design studio

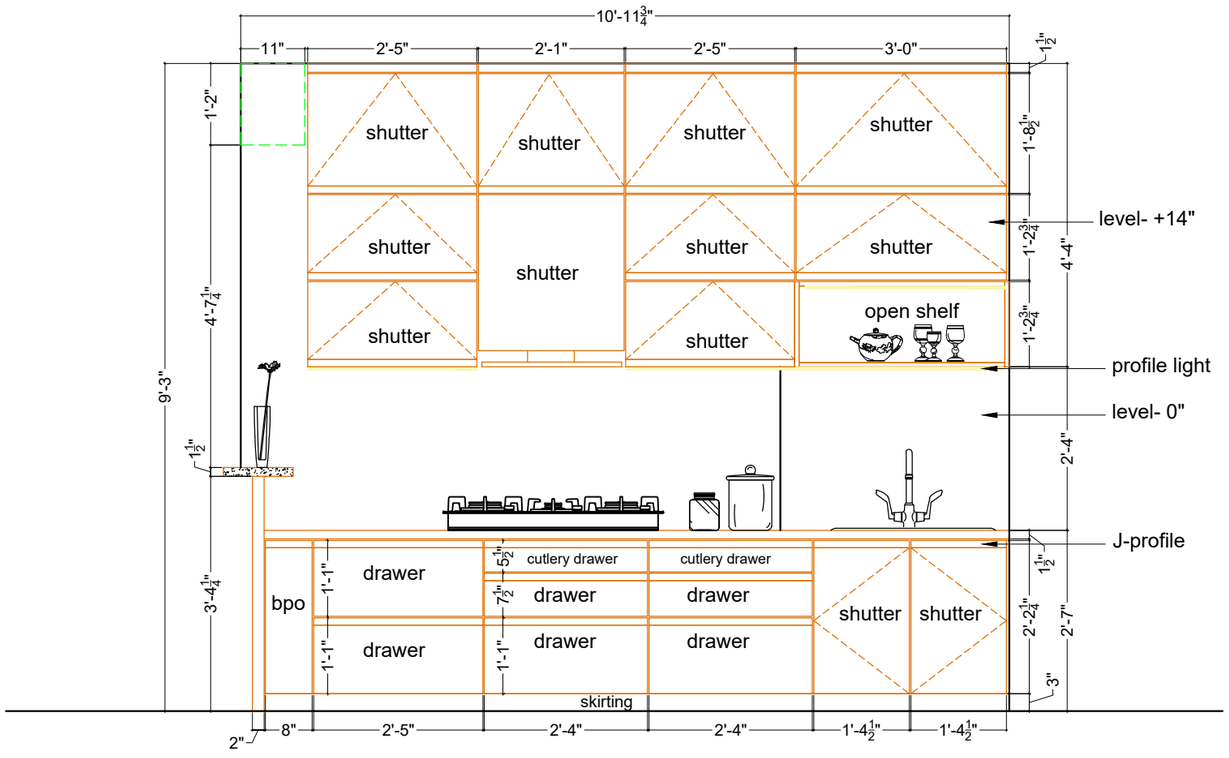

ELEVATION - A

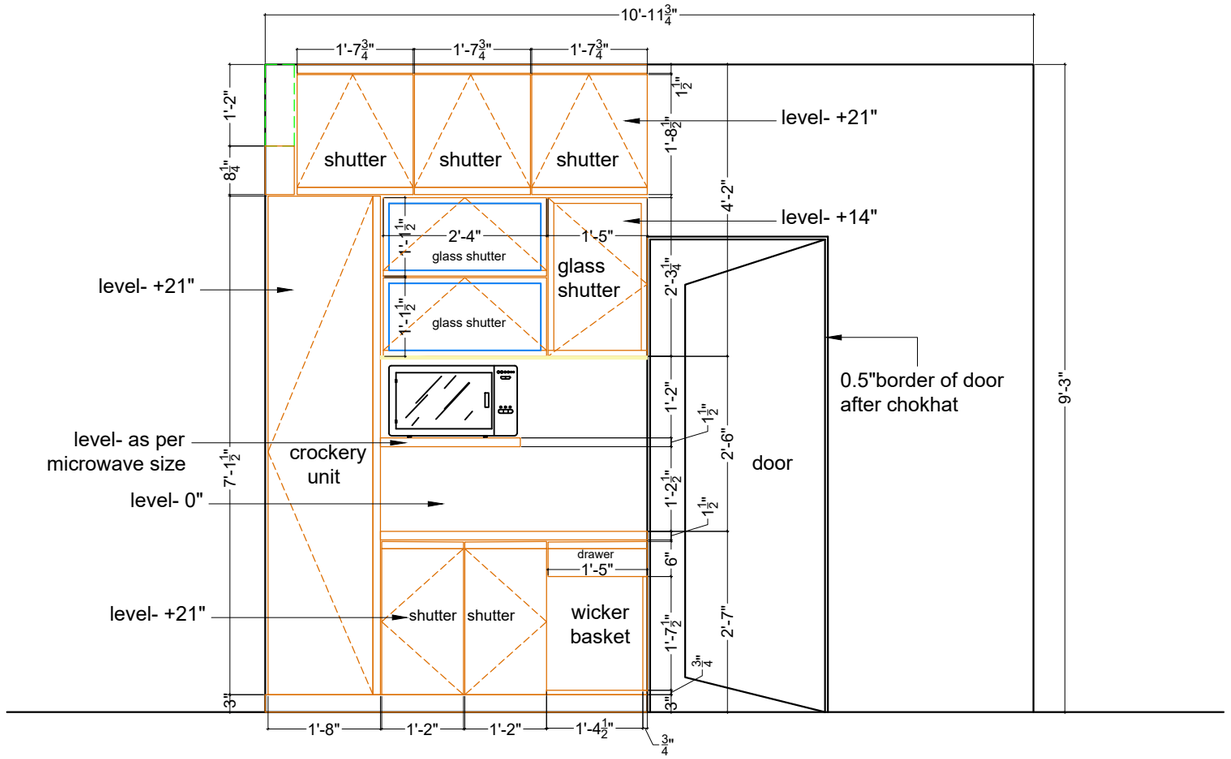

ELEVATION - C

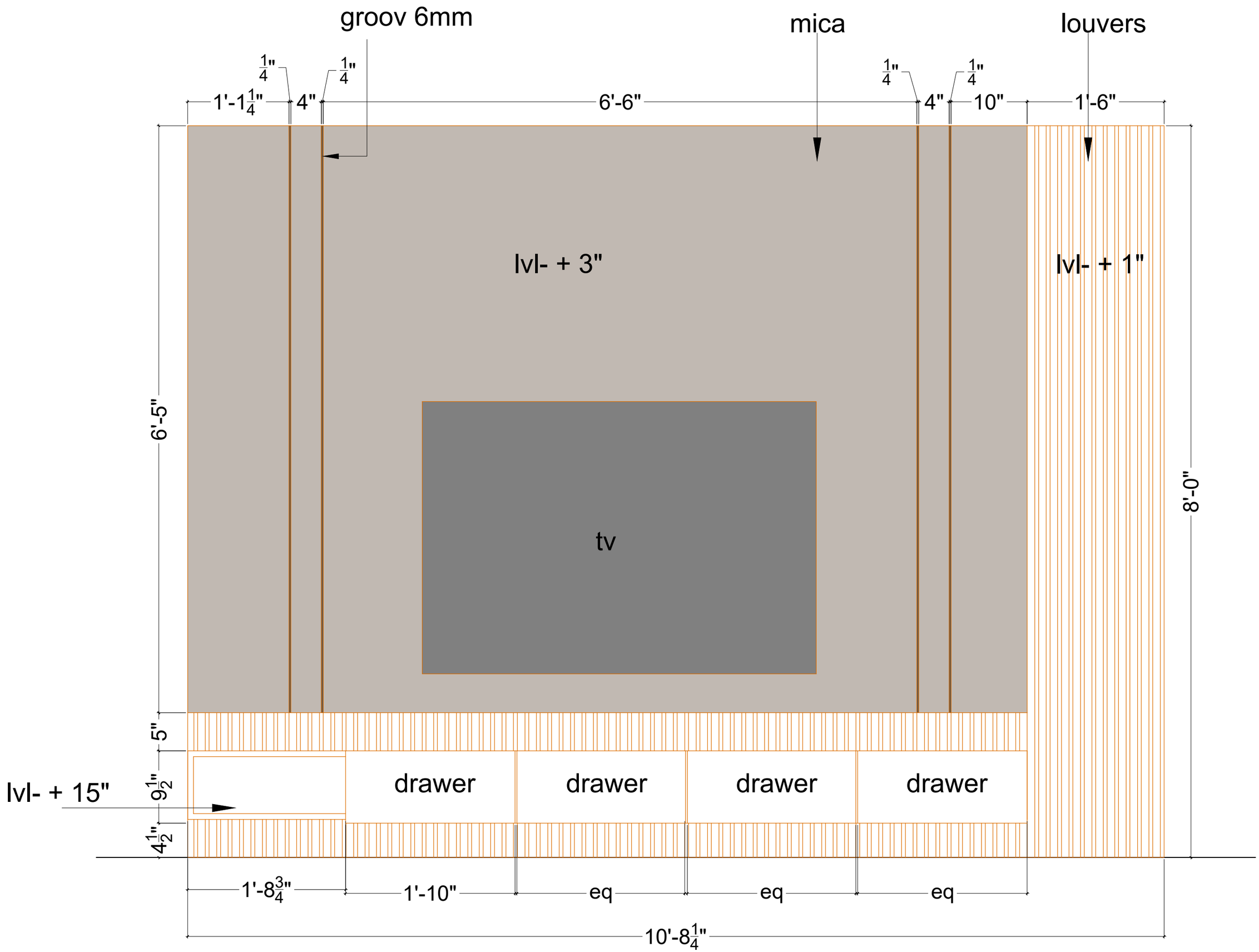
groov 6mm
mica
louvers
1/4"
1/4"
1/4"
1/4"
1'-1 1/4"
4"
6'-6"
4"
10"
1'-6"
lvl- + 3"
lvl- + 1"
6'-5"
8'-0"
tv
5"
lvl- + 15"
9 1/2"
4 1/2"
drawer
drawer
drawer
drawer
1'-8 3/4"
1'-10"
eq
eq
eq
10'-8 1/4"

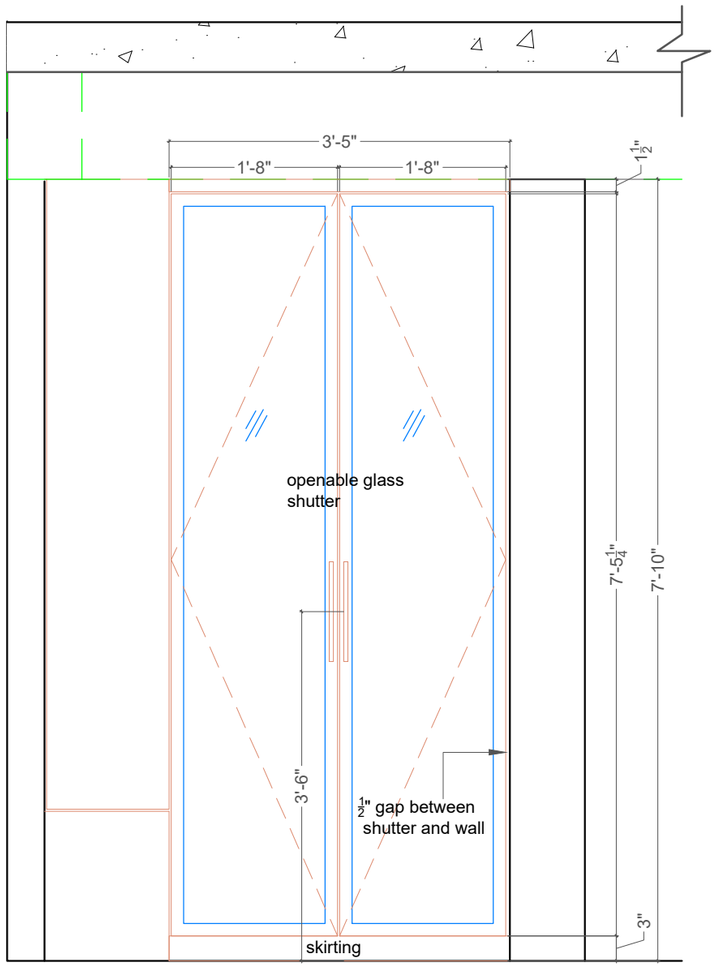

OUTDOOR ELEVATION

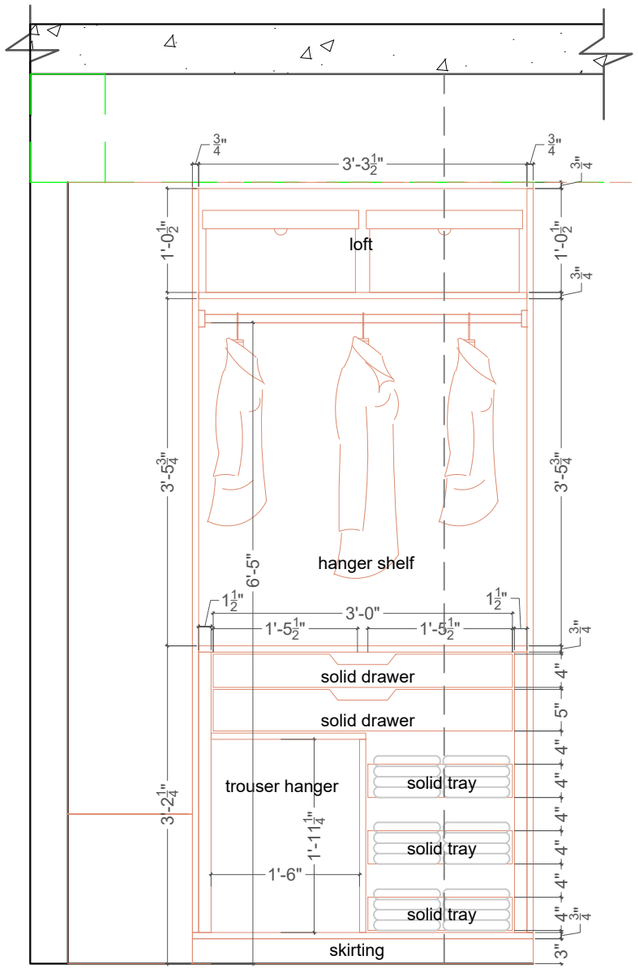

INNER ELEVATION

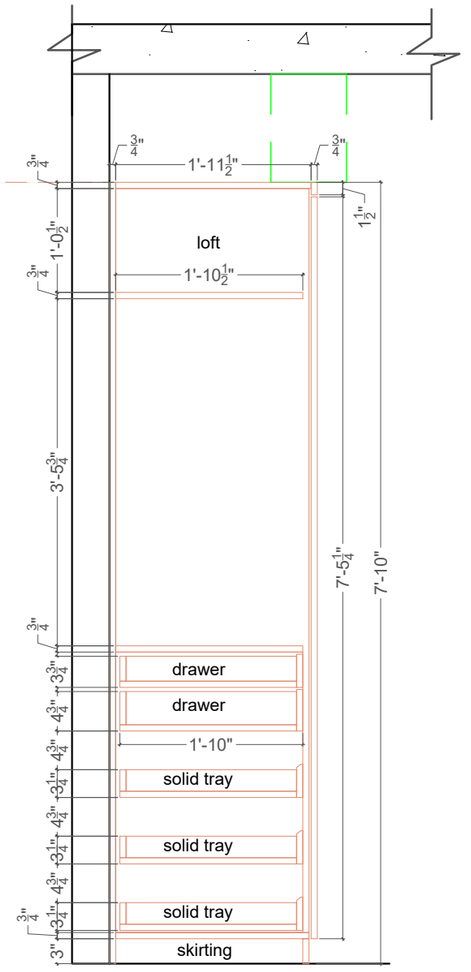

SECTIONAL SIDE VIEW

A

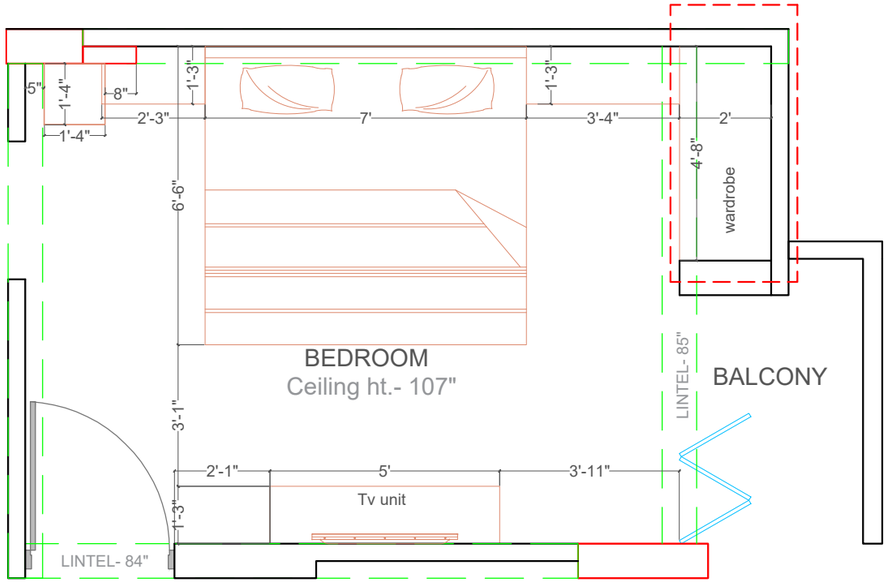

KEY PLAN

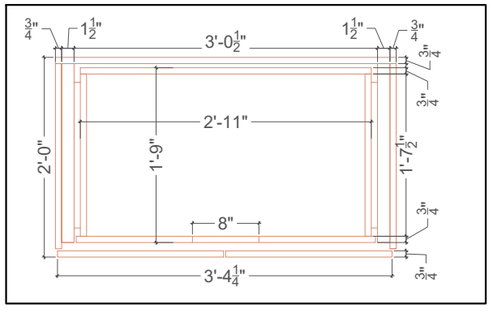

SECTIONAL PLAN LAYOUT

PROJECT TITLE: SARIKA AND PANKAJ DRAWING TITLE: WARDROBE DRAWING OF MASTER BEDROOM (OPTION 2)	DATE : 06-01-2025 DESIGNED BY ID.SHREYANSH SCALE : 1 = 1 NORTH
NOTES : 1. All dimensions are in feet and inches. 2. All dimensions shall be verified on site & if any changes are made then it shall be immediately brought to the notice of the architects before commencement of the work.	PRINCIPAL ARCHITECT : Kavya Trehan C-77,B-F, Shyam Apartment, Sarojini Marg, C - Scheme, Jaipur, 302001 Contact : 9950244465 STAVYA design studio

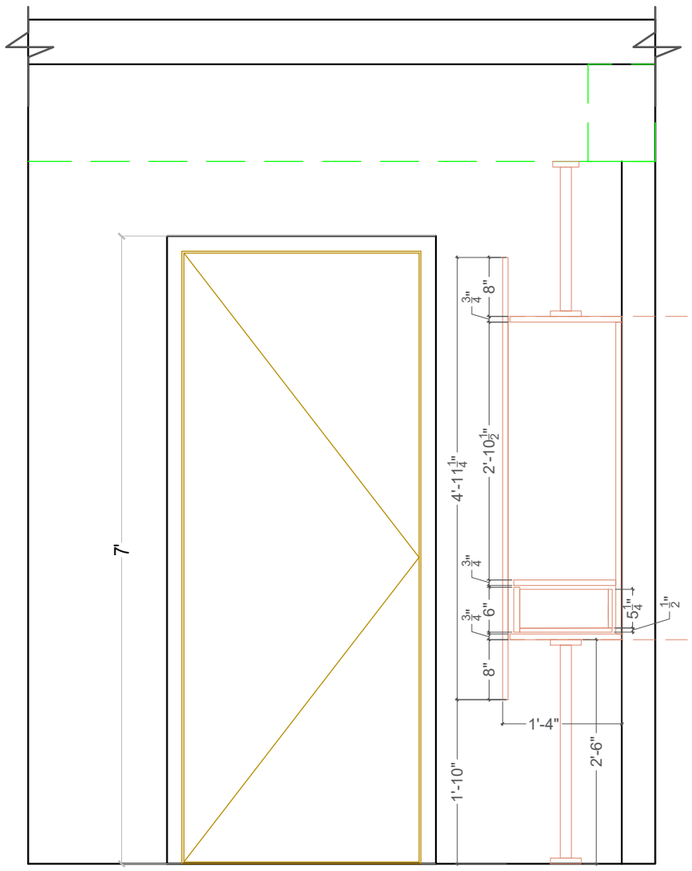

SECTION - A

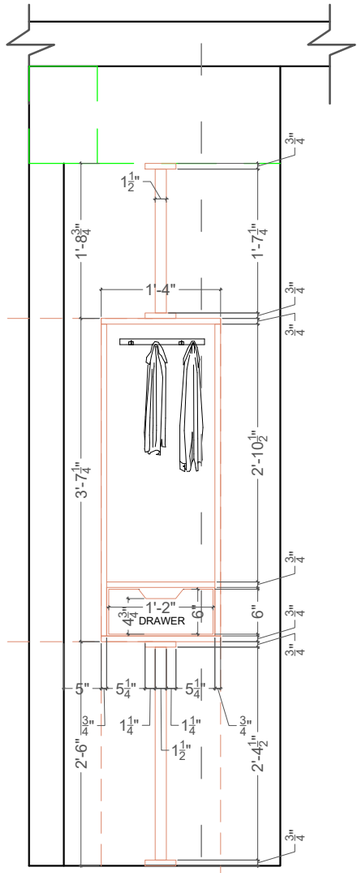

INNER ELEVATION

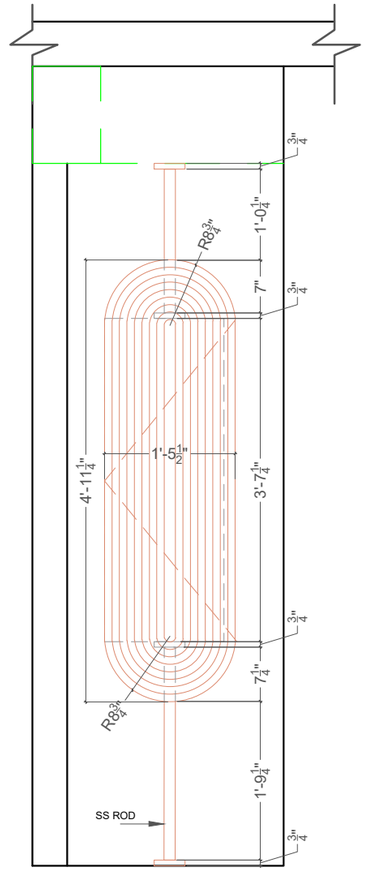

OUTER ELEVATION

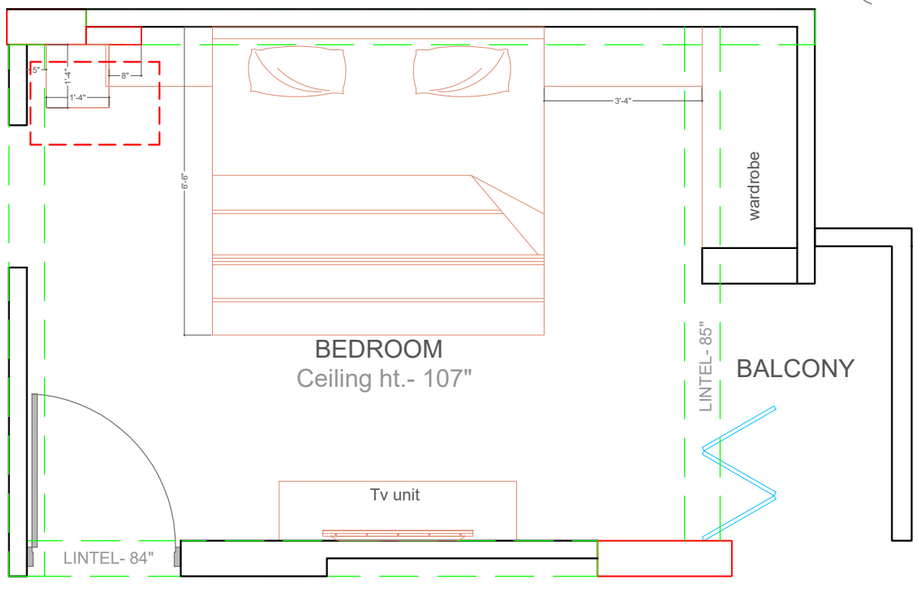

KEY PLAN

A

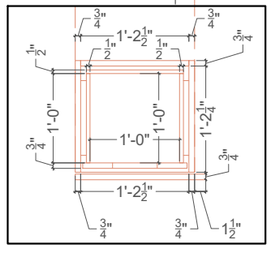

SECTIONAL PLAN

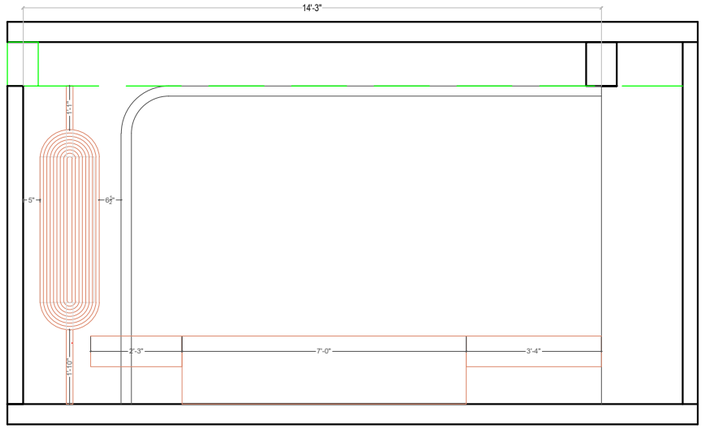

WALL ELEVATION

PROJECT TITLE: SARIKA AND PANKAJ DRAWING TITLE: HANGING WARDROBE DRAWING OF MASTER BEDROOM	DATE : 27-12-2024 SCALE : 1 = 1 DESIGNED BY ID.SHREYANSH NORTH
NOTES : 1. All dimensions are in feet and inches. 2. All dimensions shall be verified on site & if any changes are made then it shall be immediately brought to the notice of the architects before commencement of the work.	PRINCIPAL ARCHITECT : Kavya Trehan C-77,B-F, Shyam Apartment, Sarojini Marg, C - Scheme, Jaipur, 302001 Contact : 9950244465 STAVYA design studio



SECTIONAL SIDE VIEW

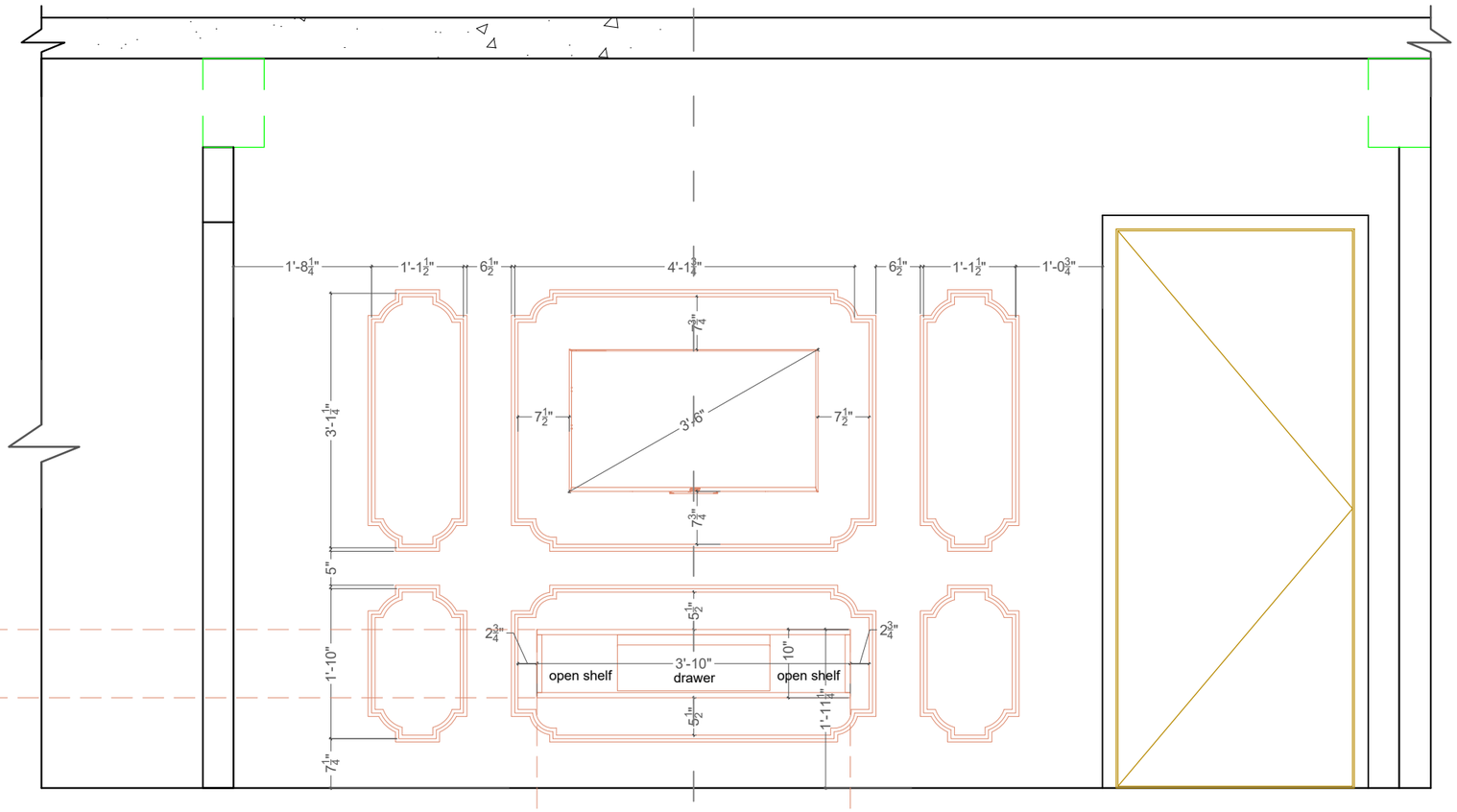

WALL ELEVATION

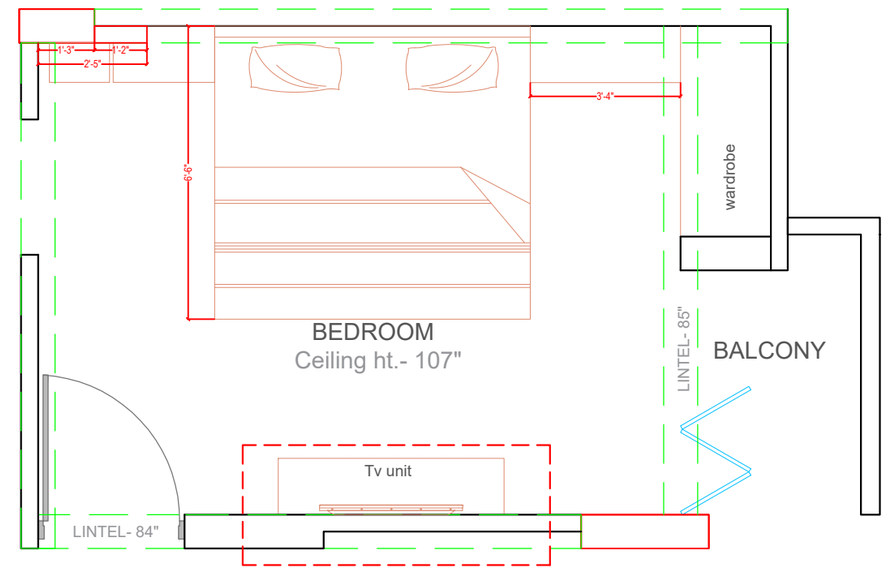

KEY PLAN

A

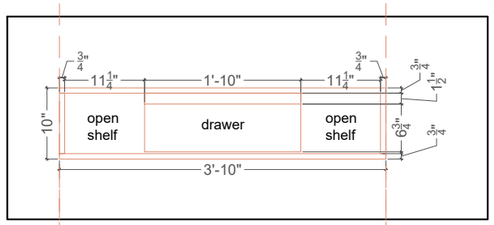

OUTER ELEVATION

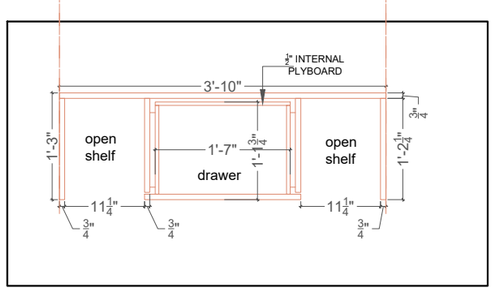

SECTIONAL PLAN LAYOUT

PROJECT TITLE: SARIKA AND PANKAJ DRAWING TITLE: TV CONSOLE DRAWING OF MASTER BEDROOM (OPTION 2)	DATE : 31-12-2024 SCALE : 1 = 1 DESIGNED BY ID.SHREYANSH NORTH
NOTES : 1. All dimensions are in feet and inches. 2. All dimensions shall be verified on site & if any changes are made then it shall be immediately brought to the notice of the architects before commencement of the work.	PRINCIPAL ARCHITECT : Kavya Trehan C-77,B-F, Shyam Apartment, Sarojini Marg, C - Scheme, Jaipur, 302001 Contact : 9950244465 STAVYA design studio

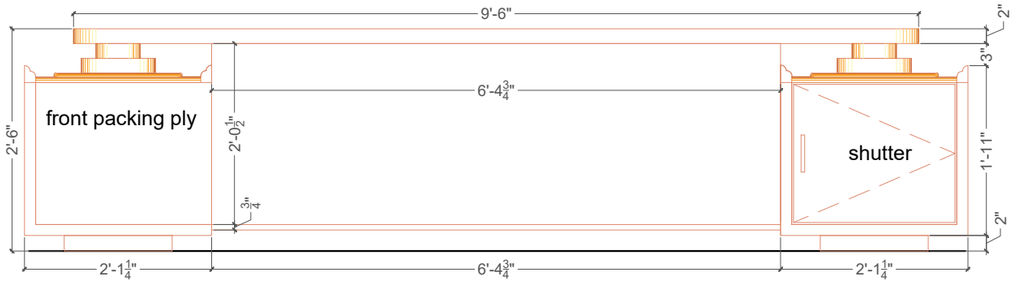

BACK ELEVATION

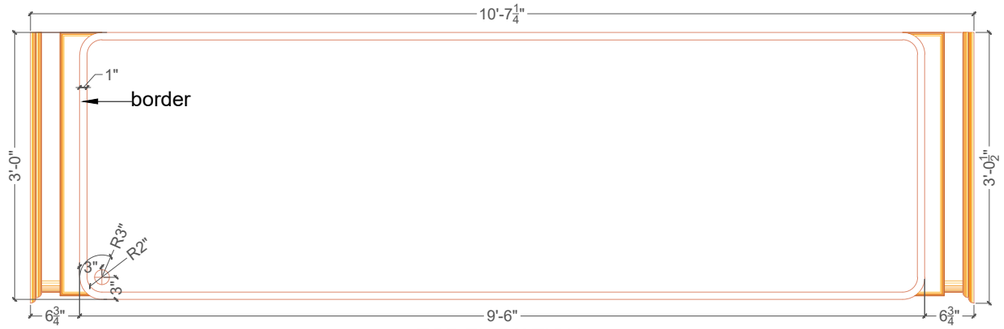

TOP ELEVATION

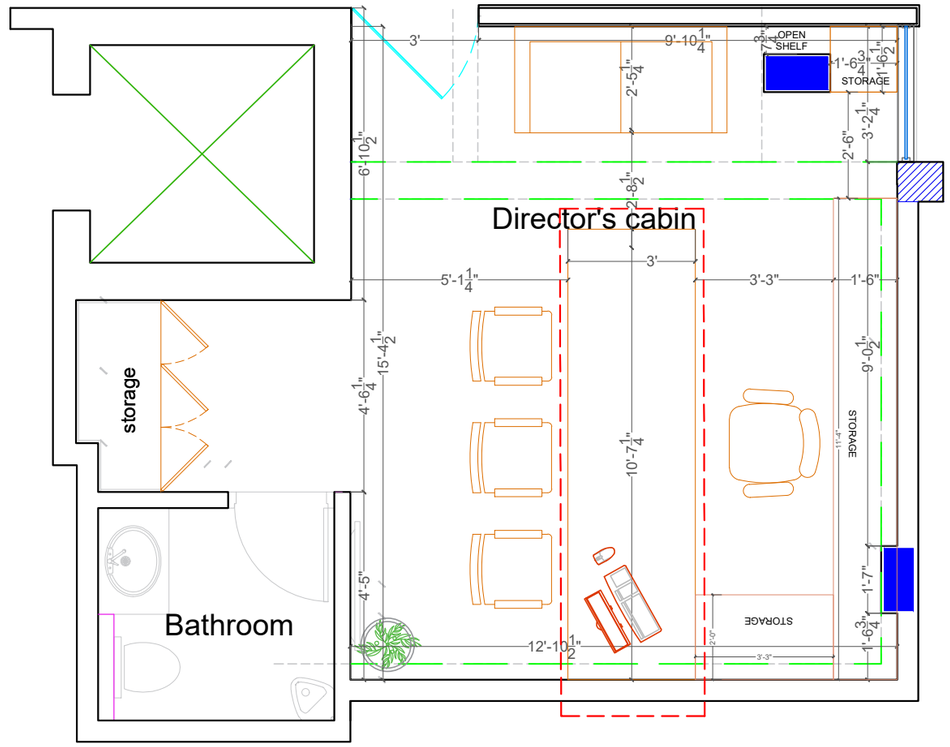

KEY PLAN

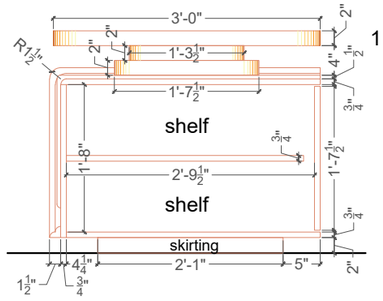

SIDE SECTIONAL ELEVATION A-A

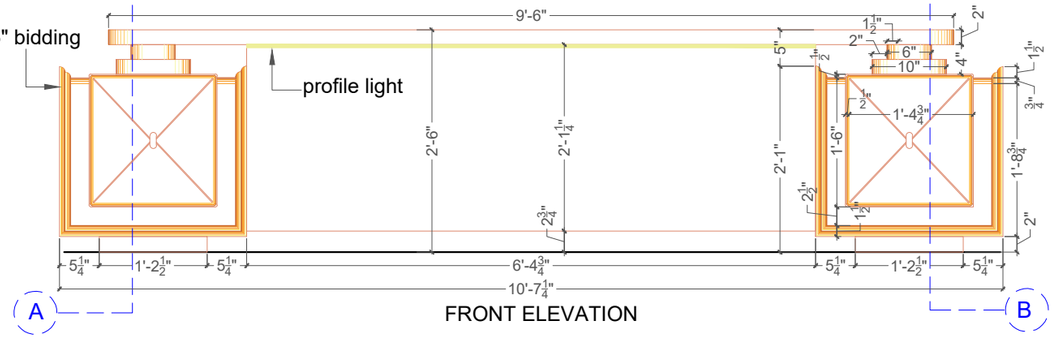

FRONT ELEVATION

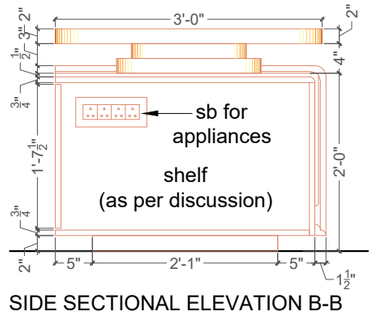

SIDE SECTIONAL ELEVATION B-B

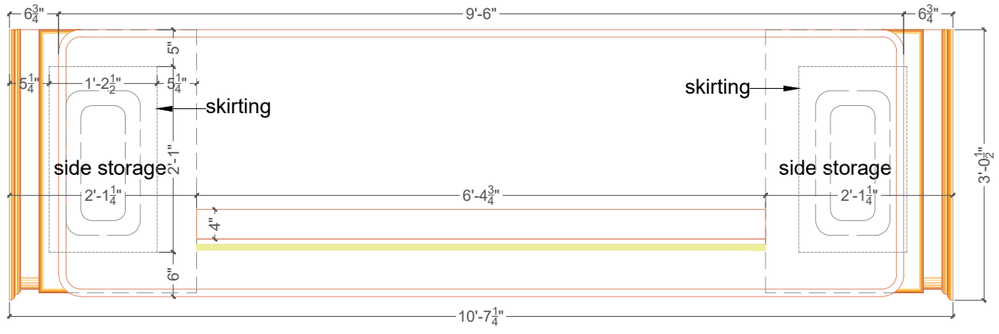

SECTIONALTOP PLAN

PROJECT TITLE: CHETAN AND NARESH DRAWING TITLE: TABLE OF CHETAN'S CABIN	DATE : 21-01-2025 DESIGNED BY ID.SHREYANSH SCALE : 1 = 1 NORTH
NOTES : 1. All dimensions are in feet and inches. 2. All dimensions shall be verified on site & if any changes are made then it shall be immediately brought to the notice of the architects before commencement of the work.	PRINCIPAL ARCHITECT : Kavya Trehan C-77,B-F, Shyam Apartment, Sarojini Marg, C - Scheme, Jaipur, 302001 Contact : 9950244465 STAVYA design studio

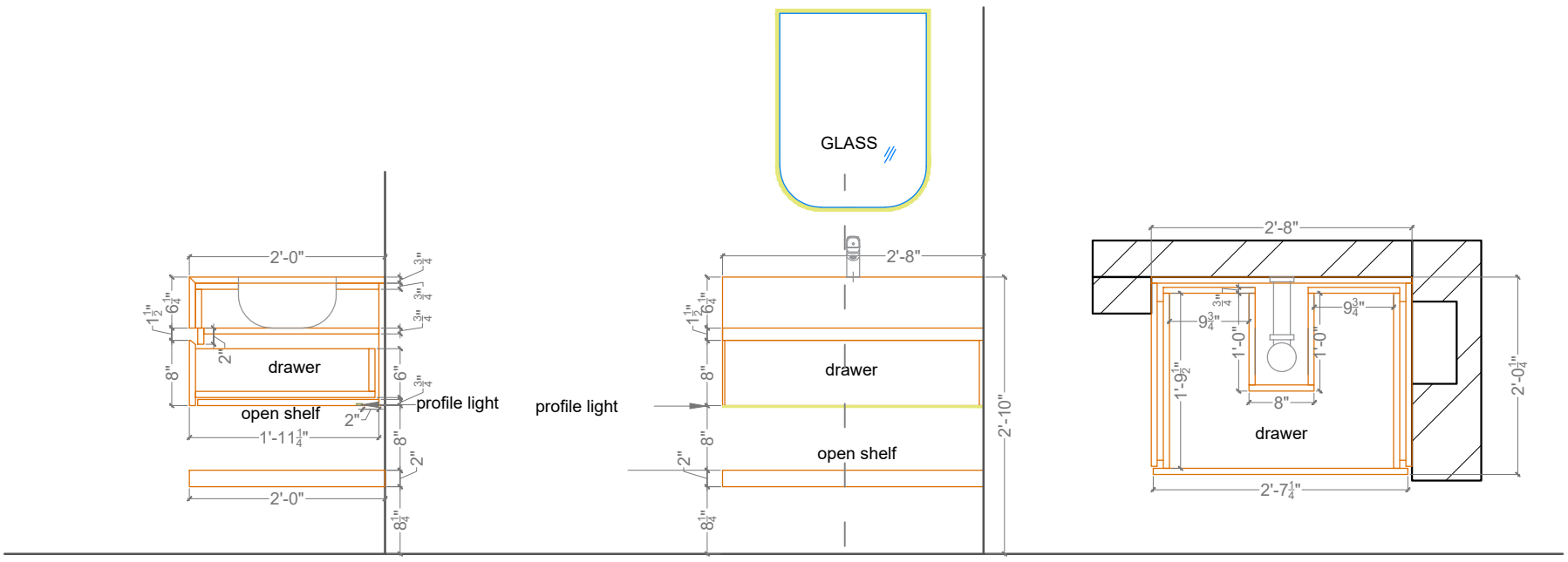

SECTIONAL SIDE ELEVATION

FRONT ELEVATION

SECTIONAL PLAN LAYOUT

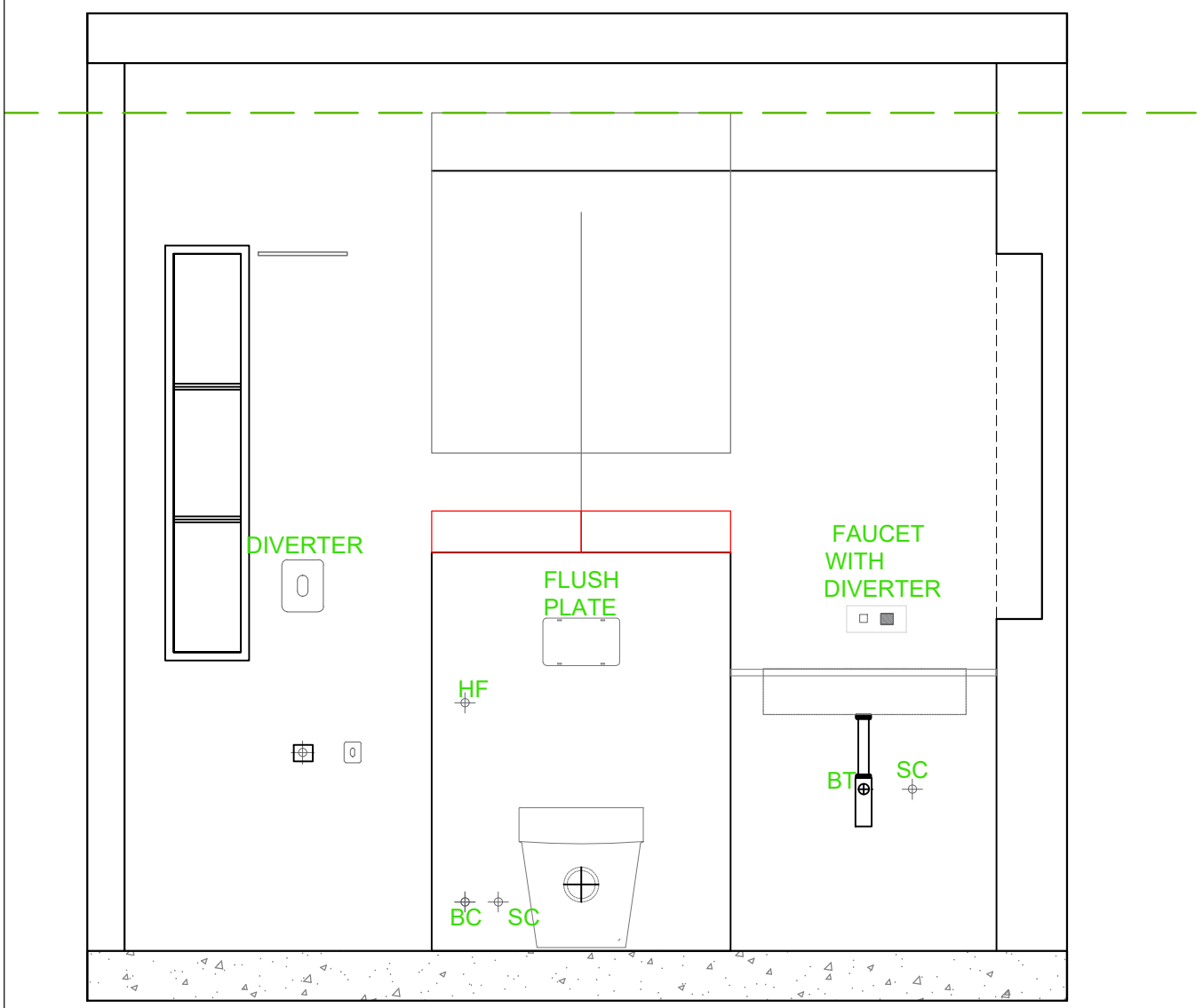

WAll ELEVATION

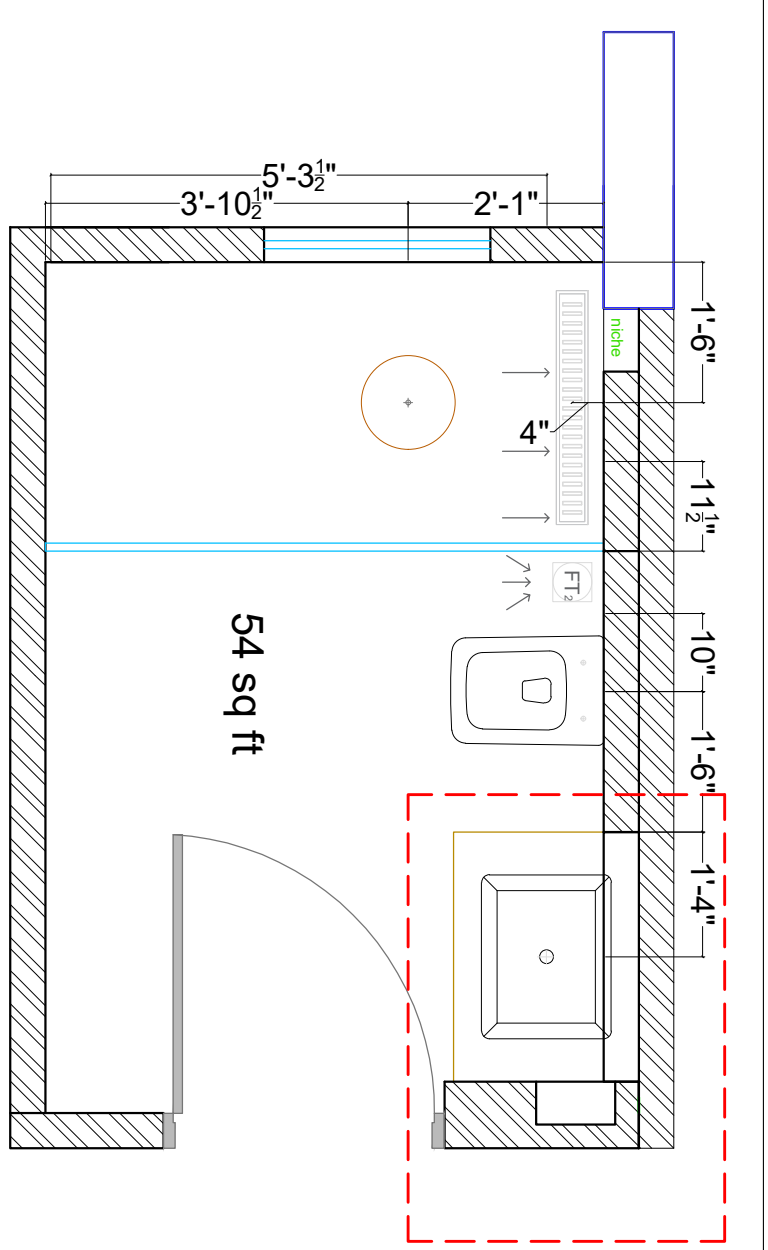

KEY PLAN

PROJECT TITLE:
SARIKA & PANKAJ

DRAWING TITLE:
MASTER WASHROOM
VANITY

DATE :
02-01-2025

SCALE :
1 = 1

DESIGNED BY
ID.SHREYANSH

NORTH

NOTES :

1. All dimensions are in feet and inches.
2. All dimensions shall be verified on site & if any changes are made then it shall be immediately brought to the notice of the architects before commencement of the work.

PRINCIPAL ARCHITECT :
Kavya Trehan

C-77,B-F, Shyam Apartment,
Sarojini Marg, C - Scheme,
Jaipur, 302001
Contact : 9950244465

STAVYA design studio

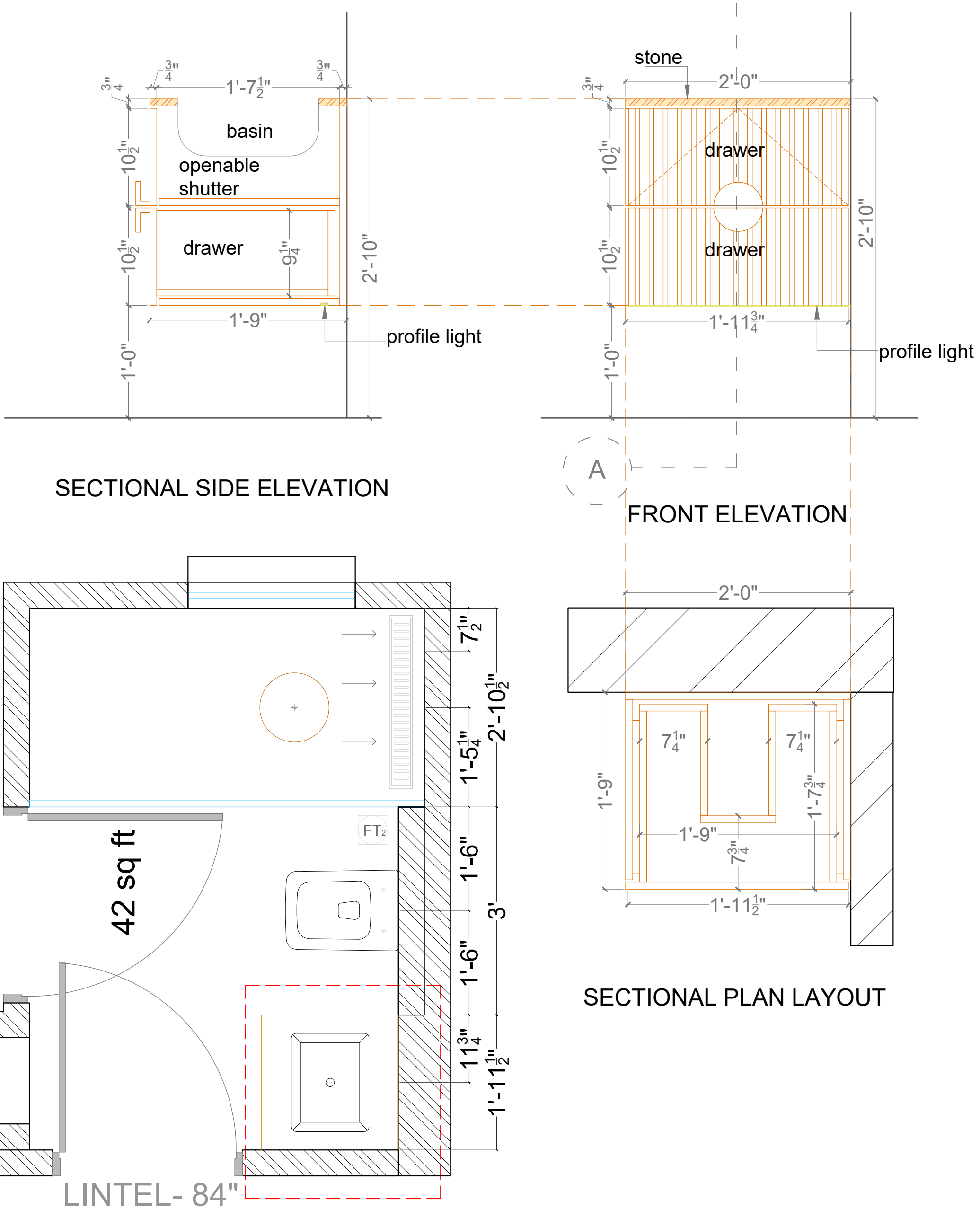

SECTIONAL PLAN LAYOUT

KEY PLAN

PROJECT TITLE:
SARIKA & PANKAJ

DRAWING TITLE:
KIDS WASHROOM VANITY

DATE :
04-01-2025

SCALE :
1 = 1

DESIGNED BY
ID.SHREYANSH

NORTH

NOTES :

1. All dimensions are in feet and inches.
2. All dimensions shall be verified on site & if any changes are made then it shall be immediately brought to the notice of the architects before commencement of the work.

PRINCIPAL ARCHITECT :
Kavya Trehan

C-77,B-F, Shyam Apartment,
Sarojini Marg, C - Scheme,
Jaipur, 302001
Contact : 9950244465

STAVYA design studio

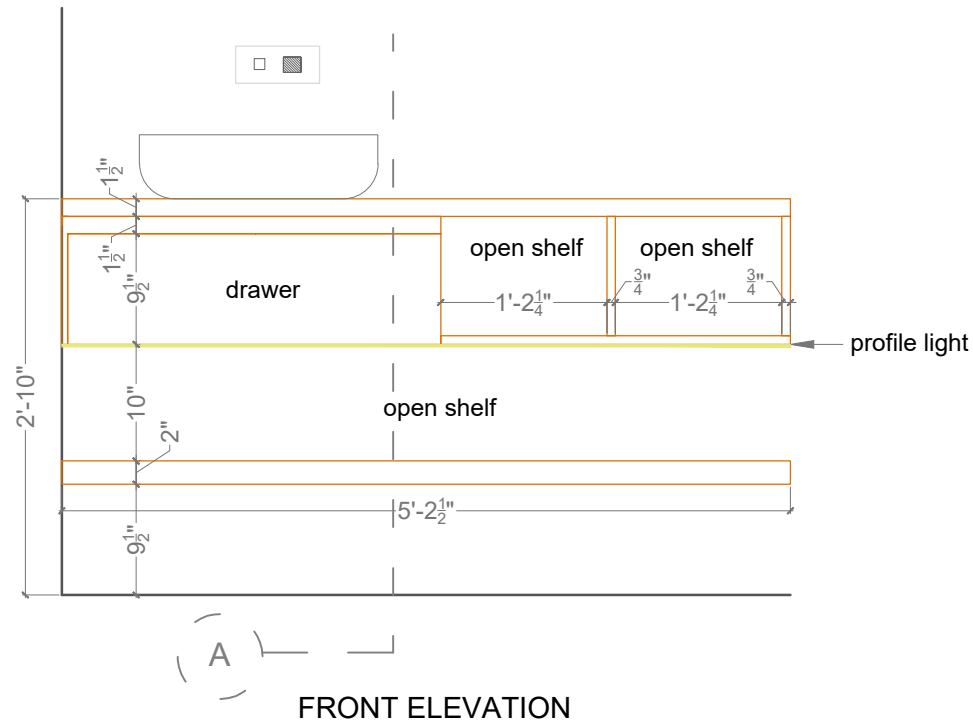

FRONT ELEVATION

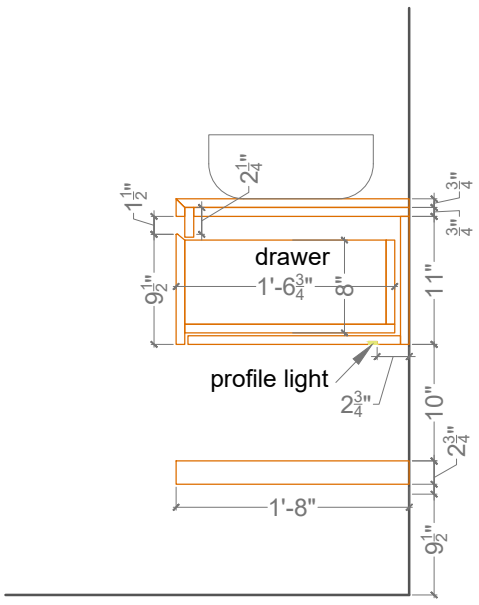

SECTIONAL SIDE ELEVATION

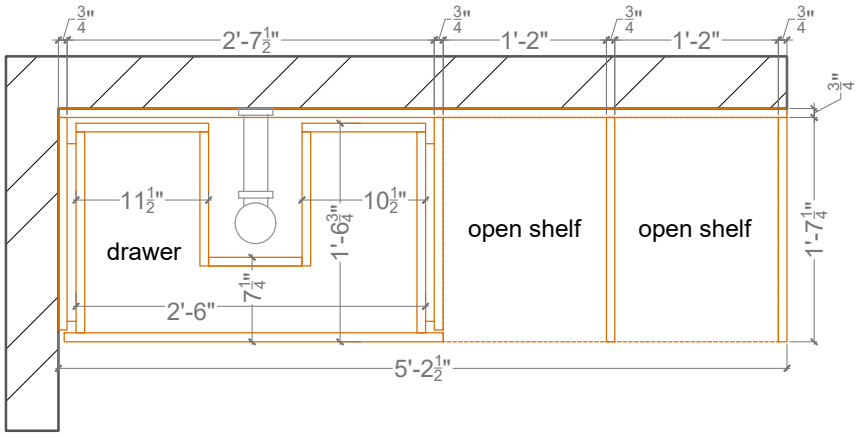

SECTIONAL PLAN LAYOUT

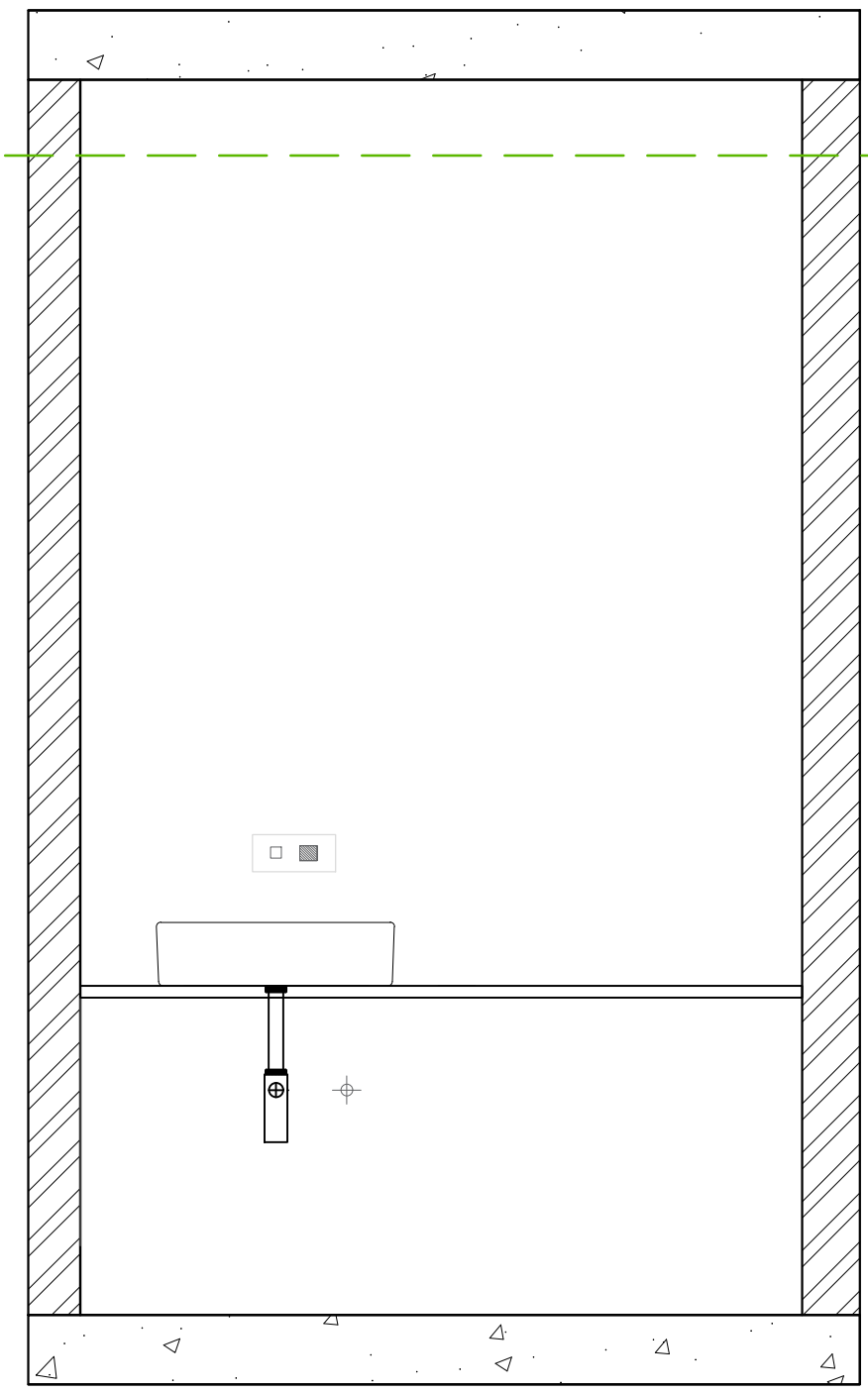

WAll ELEVATION

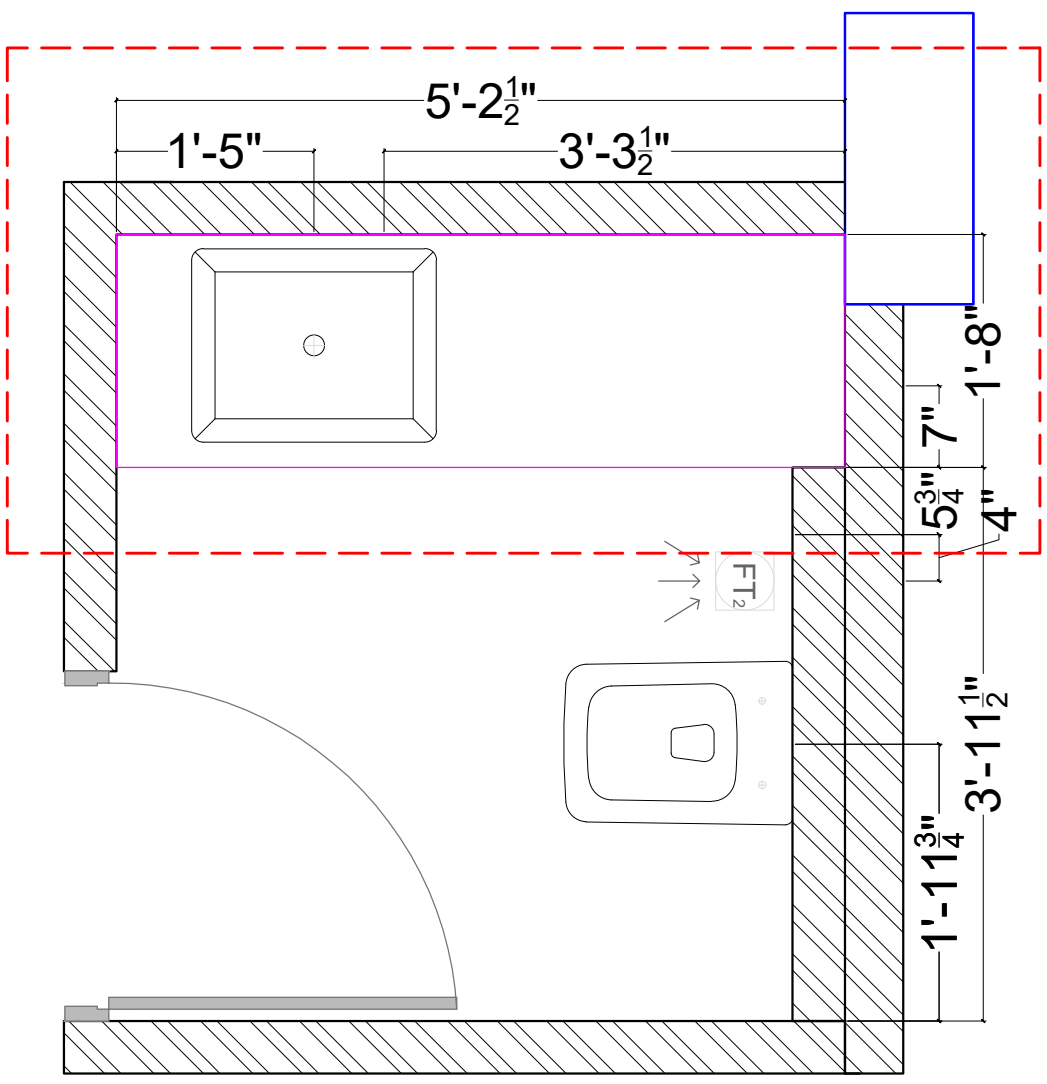

KEY PLAN

PROJECT TITLE:
SARIKA & PANKAJ

DRAWING TITLE:
MASTER WASHROOM
VANITY

DATE :
02-01-2025

SCALE :
1 = 1

DESIGNED BY
ID.SHREYANSH

NORTH

NOTES :

1. All dimensions are in feet and inches.
2. All dimensions shall be verified on site & if any changes are made then it shall be immediately brought to the notice of the architects before commencement of the work.

PRINCIPAL ARCHITECT :
Kavya Trehan

C-77,B-F, Shyam Apartment,
Sarojini Marg, C - Scheme,
Jaipur, 302001
Contact : 9950244465

STAVYA design studio

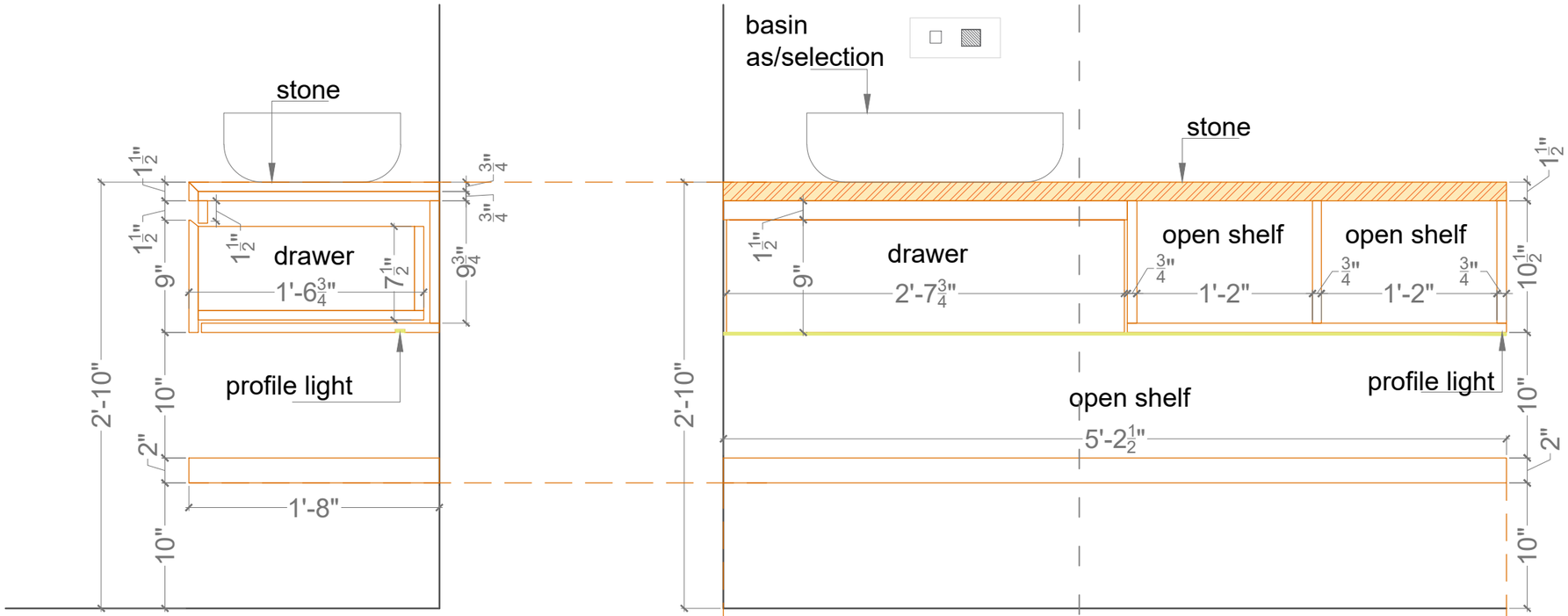

SECTIONAL SIDE ELEVATION

FRONT ELEVATION

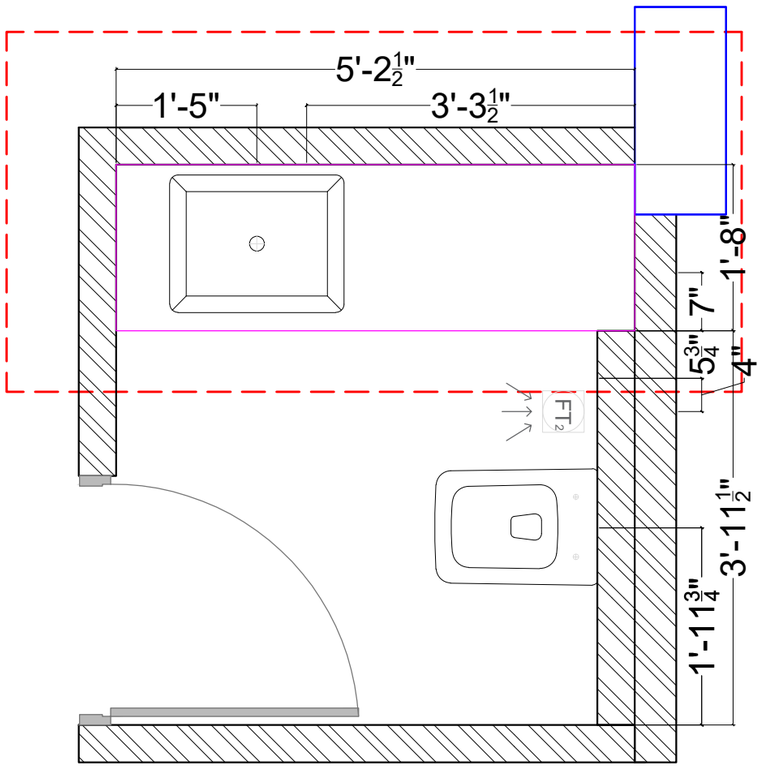

KEY PLAN

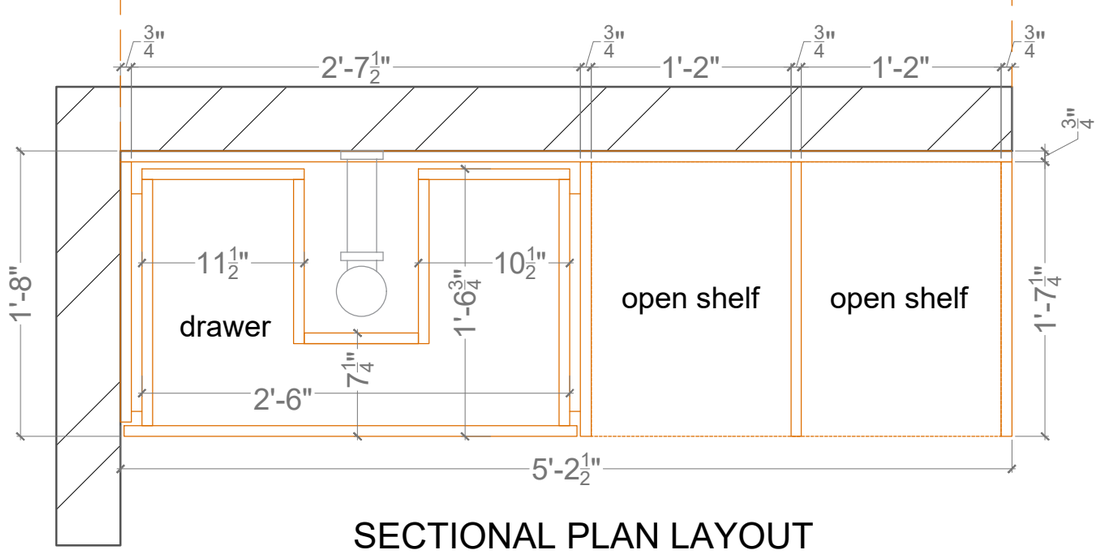

SECTIONAL PLAN LAYOUT

PROJECT TITLE:
MR.PANKAJ & MRS.SARIKA

DRAWING TITLE:
VANITY UNIT OF POWDER WASHROOM

DATE : 04-01-2025

SCALE : 1 = 1

DESIGNED BY
ID.SHREYANSH

NORTH

NOTES :

1. All dimensions are in feet and inches.
2. All dimensions shall be verified on site & if any changes are made then it shall be immediately brought to the notice of the architects before commencement of the work.

PRINCIPAL ARCHITECT :
Kavya Trehan

C-77,B-F, Shyam Apartment,
Sarojini Marg, C - Scheme,
Jaipur, 302001
Contact : 9950244465

STAVYA design studio

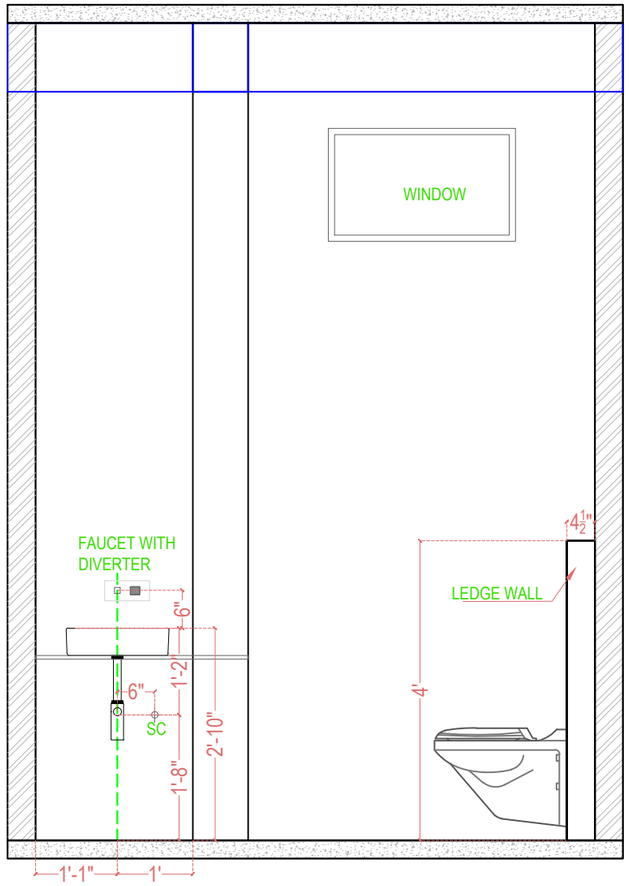

SECTION AT A-A

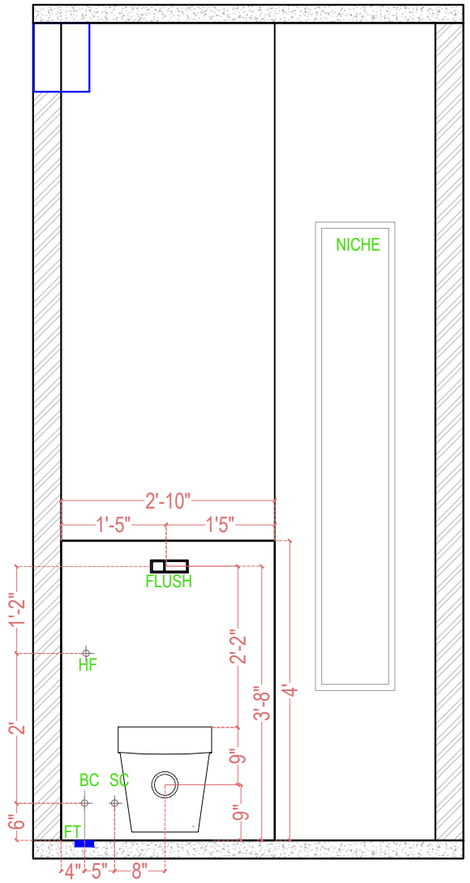

SECTION AT B-B

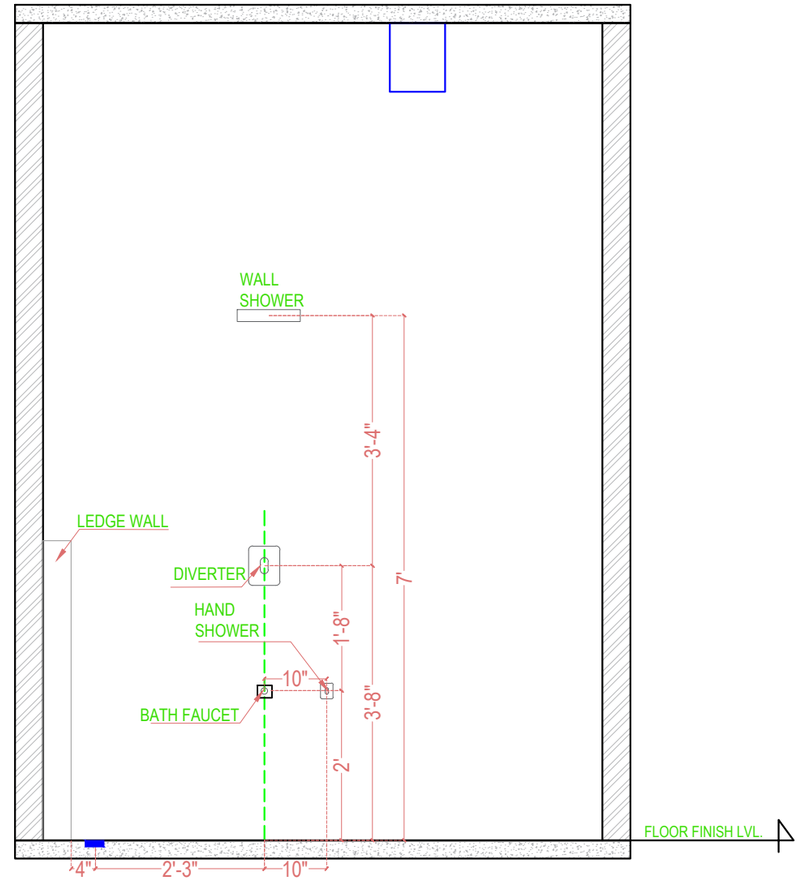

SECTION AT C-C

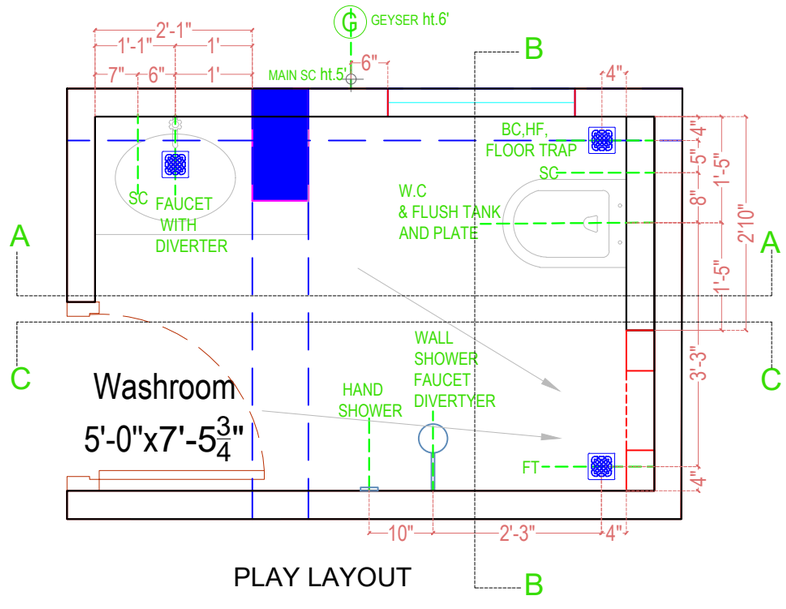

PLAY LAYOUT

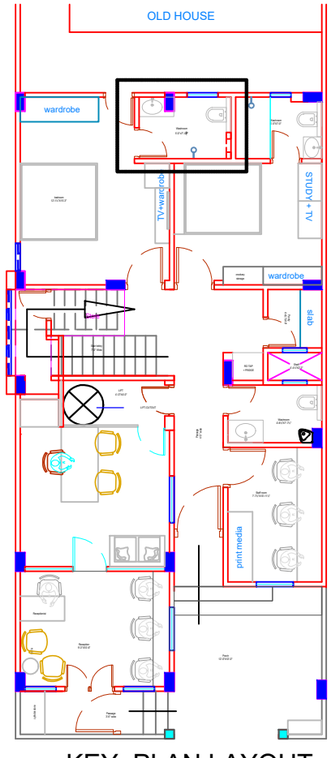

KEY PLAN LAYOUT

PLUMBING LAYOUT OF WASHROOM-2

PROJECT TITLE:
MR. PANKAJ AND POORVA

DRAWING TITLE:
Plumbing Layout of Ground floor

DATE :
21-12-2024

SCALE :
1 = 1

DRAFTED BY
SIYA

NORTH

NOTES :

1. All dimensions are in feet and inches.
2. All dimensions shall be verified on site & if any changes are made then it shall be immediately brought to the notice of the architects before commencement of the work.

PRINCIPAL ARCHITECT :
Kavya Trehan

C-77,B-F, Shyam Apartment,
Sarojini Marg, C - Scheme,
Jaipur, 302001
Contact : 9950244465

STAVYA design studio